GENERAL NOTES:

1. SEE SHEET A6.41 FOR ROOM FINISH SCHEDULES

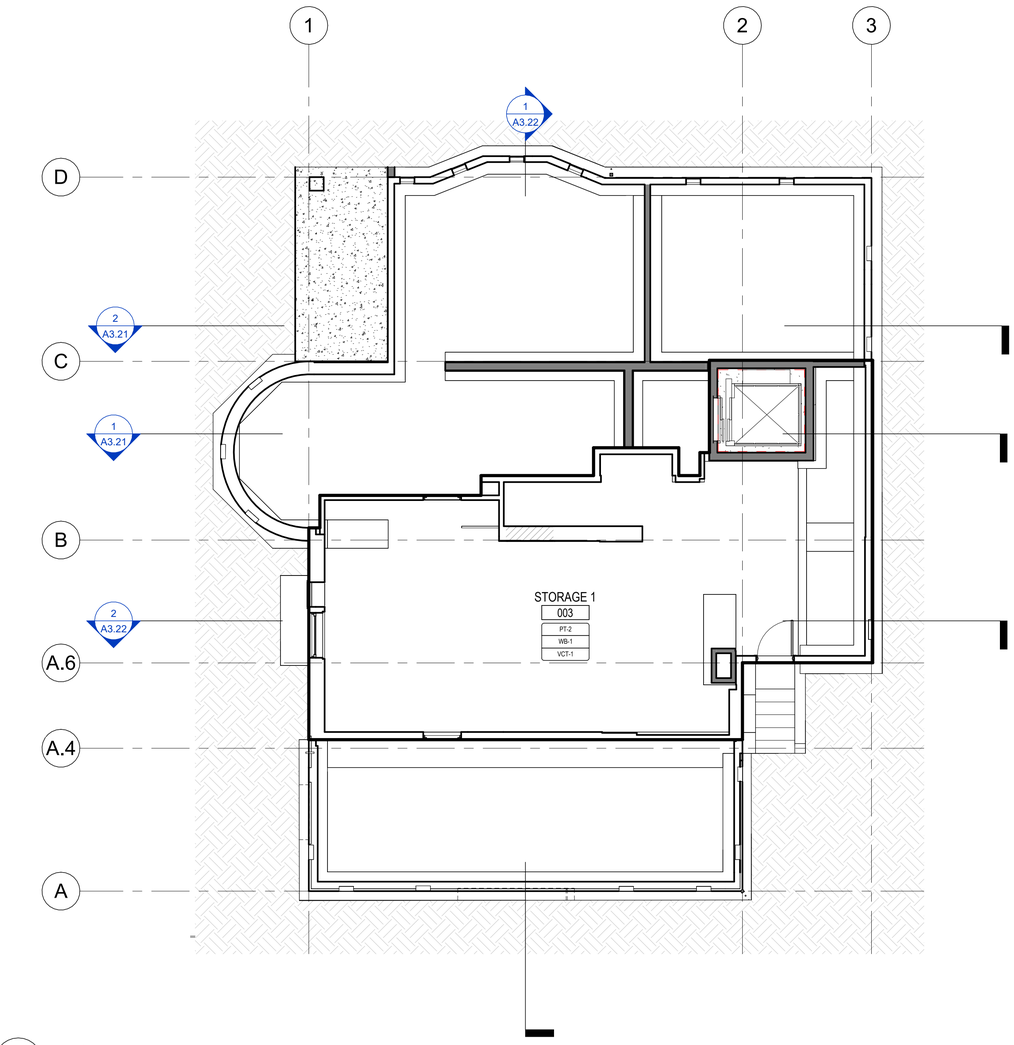

1 FINISH PLAN - BASEMENT
3/16" = 1'-0"

LEGEND

RM NAME / RM #	ROOM FINISH TAG. SEE A6.41 FOR FINISH SCHEDULES
XX-#	WALL FINISH
XX-#	WALL BASE
XX-#	FLOOR FINISH

CLIENT

ALAMEDA COUNTY

NOTE: If this drawing is not 22"x34" it has been revised from its original size and the scales noted on drawing/details are no longer applicable.

© 2022 Shah Kawasaki Architects

Revision Number	DATE	ISSUE DESCRIPTION
	09/03/2026	PERMIT SET

Project

WHITECOTTON COTTAGE REHABILITATION

15400 FOOTHILL BLVD
SAN LEANDRO, CA 94578

Architect of Record

P&T

Consultant

PAGE & TURNBULL
170 MAIDEN LANE, 5TH FLOOR
SAN FRANCISCO, CA

LICENSED ARCHITECT
PETER BIRBROIR
C23030
EX.4/30/2027
STATE OF CALIFORNIA

Drawing Title

FINISH PLAN - BASEMENT

Drawing No.

A2.21

SKA Project Number: 25001

GENERAL NOTES:

1. SEE SHEET A6.41 FOR ROOM FINISH SCHEDULES

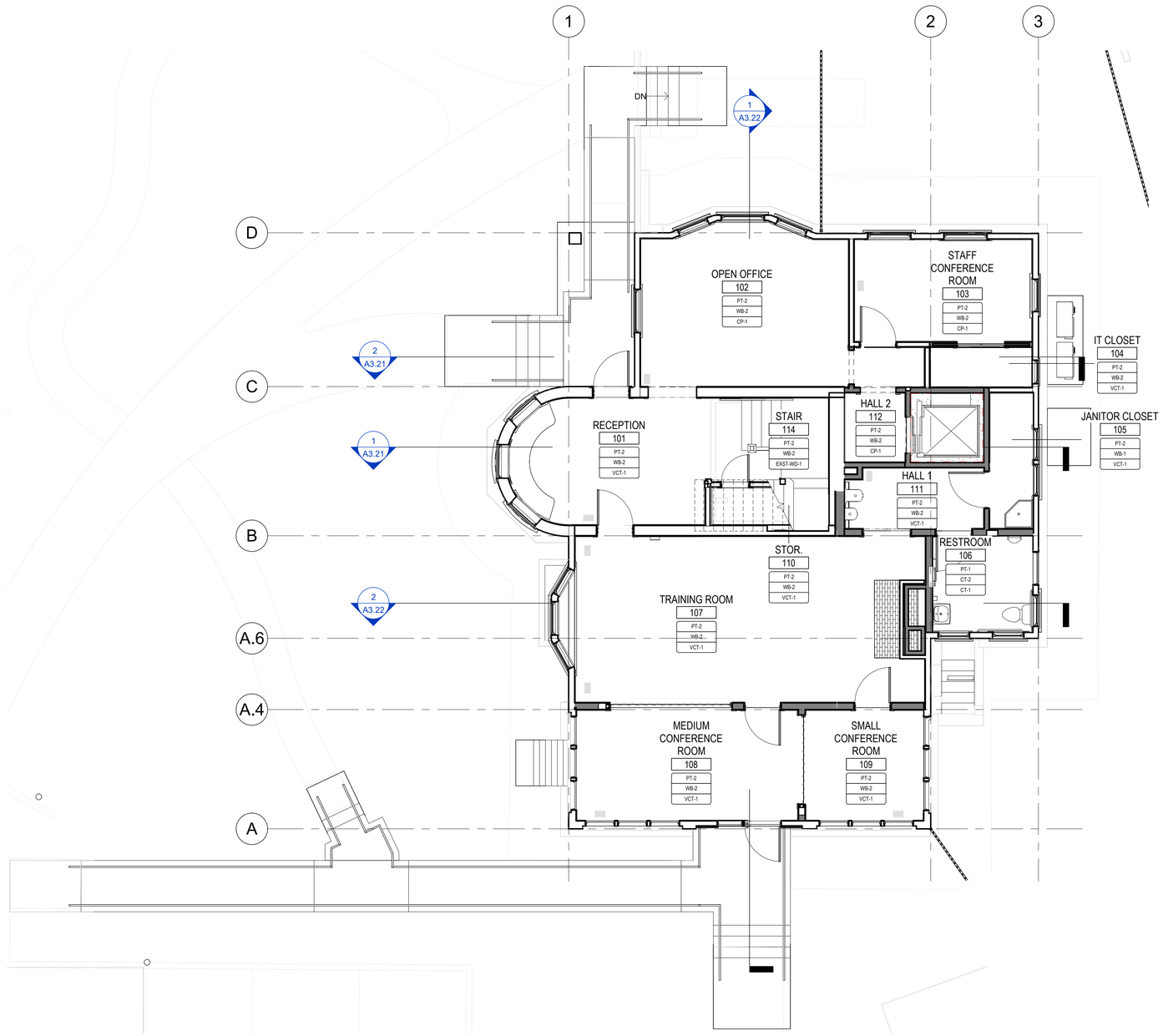

1 FINISH PLAN - FIRST FLOOR
3/16" = 1'-0"

LEGEND

RM NAME / RM #	ROOM FINISH TAG. SEE A6.41 FOR FINISH SCHEDULES
XX-#	WALL FINISH
XX-#	WALL BASE
XX-#	FLOOR FINISH

CLIENT

GENERAL SERVICES AGENCY GSA COUNTY OF ALAMEDA

ALAMEDA COUNTY

NOTE: If this drawing is not 22"x34" it has been revised from its original size and the scales noted on drawing/details are no longer applicable.

© 2022 Shah Kawasaki Architects

Revision Number	DATE	ISSUE DESCRIPTION
	09/03/2026	PERMIT SET

Project

WHITECOTTON COTTAGE REHABILITATION

15400 FOOTHILL BLVD
SAN LEANDRO, CA 94578

Architect of Record

P&T

Consultant

PAGE & TURNBULL
170 MAIDEN LANE, 5TH FLOOR
SAN FRANCISCO, CA

LICENSED ARCHITECT PETER BIRKINSHAW C23018 EX.4/30/2027 STATE OF CALIFORNIA

Drawing Title

FINISH PLAN - FIRST FLOOR

Drawing No.

A2.22

SKA Project Number: 25001

GENERAL NOTES:

1. SEE SHEET A6.41 FOR ROOM FINISH SCHEDULES

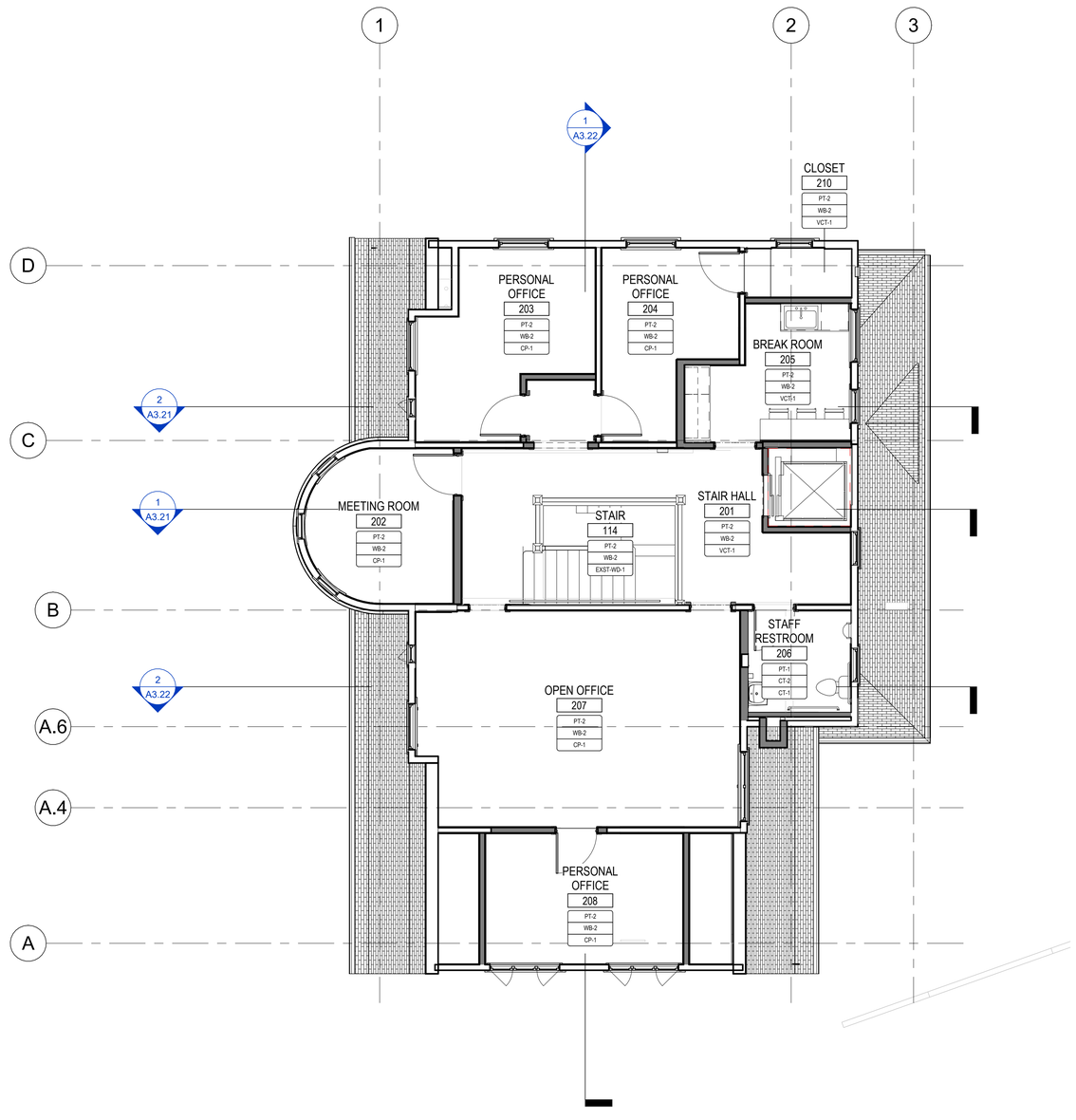

1 FINISH PLAN - SECOND FLOOR
3/16" = 1'-0"

LEGEND

RM NAME / RM #	ROOM FINISH TAG. SEE A6.41 FOR FINISH SCHEDULES
XX-#	WALL FINISH
XX-#	WALL BASE
XX-#	FLOOR FINISH

CLIENT

ALAMEDA COUNTY

NOTE: If this drawing is not 22"x34" it has been revised from its original size and the scales noted on drawing/details are no longer applicable.

© 2022 Shah Kawasaki Architects

Revision Number	DATE	ISSUE DESCRIPTION
	09/03/2026	PERMIT SET

Project

WHITECOTTON COTTAGE REHABILITATION

15400 FOOTHILL BLVD
SAN LEANDRO, CA 94578

Architect of Record

P&T

Consultant

PAGE & TURNBULL
170 MAIDEN LANE, 5TH FLOOR
SAN FRANCISCO, CA

LICENSED ARCHITECT
PETER BIRMINGHAM
C23018
EX.4/30/2027
STATE OF CALIFORNIA

Drawing Title

FINISH PLAN - SECOND FLOOR

Drawing No.

A2.23

SKA Project Number: 25001

GENERAL NOTES:

1. VERIFY ALL DIMENSIONS IN FIELD
2. SEE PLANS FOR PARTITION TYPES
3. SEE A6.11 AND A6.12 FOR SIZES OF DOOR OPENINGS

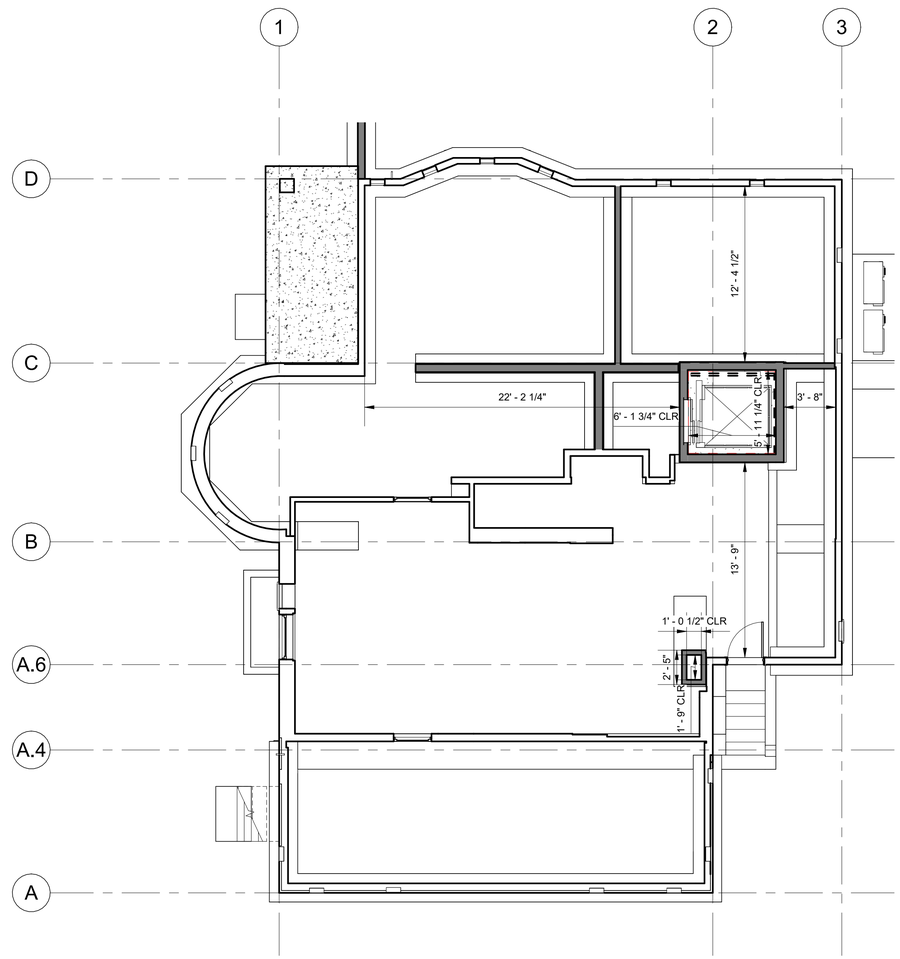

1 FRAMING PLAN - BASEMENT
3/16" = 1'-0"

LEGEND

- (E) WALL FRAMING TO REMAIN, (N) FINISHES
- (N) WALL FRAMING, (N) FINISHES
- DOOR
- INFILL (E) OPENING
- PLYWOOD AT INT. WALL; AT SHEAR WALLS AND WALLS IN PLANE WITH SHEAR WALLS. S.S.D FOR STRUCTURAL SCOPE
- ADDT'L LAYER OF PLYWOOD FOR LULA LIFT SUPPORT; SEE MANUF. INSTRUCTIONS & PARTITION TYPES

CLIENT

GENERAL SERVICES AGENCY GSA COUNTY OF ALAMEDA

ALAMEDA COUNTY

NOTE: If this drawing is not 22"x34" it has been revised from its original size and the scales noted on drawing/details are no longer applicable.

© 2022 Shah Kawasaki Architects

Revision Number	DATE	ISSUE DESCRIPTION
	09/03/2026	PERMIT SET

Project

WHITECOTTON COTTAGE REHABILITATION

15400 FOOTHILL BLVD
SAN LEANDRO, CA 94578

Architect of Record

P&T

Consultant

PAGE & TURNBULL
170 MAIDEN LANE, 5TH FLOOR
SAN FRANCISCO, CA

LICENSED ARCHITECT PETER BIRNBAUM C23026 EX.4/30/2027 STATE OF CALIFORNIA

Drawing Title

FRAMING PLAN - BASEMENT

Drawing No.

A2.31

SKA Project Number: 25001

GENERAL NOTES:

1. VERIFY ALL DIMENSIONS IN FIELD
2. SEE PLANS FOR PARTITION TYPES
3. SEE A6.11 AND A6.12 FOR SIZES OF DOOR OPENINGS

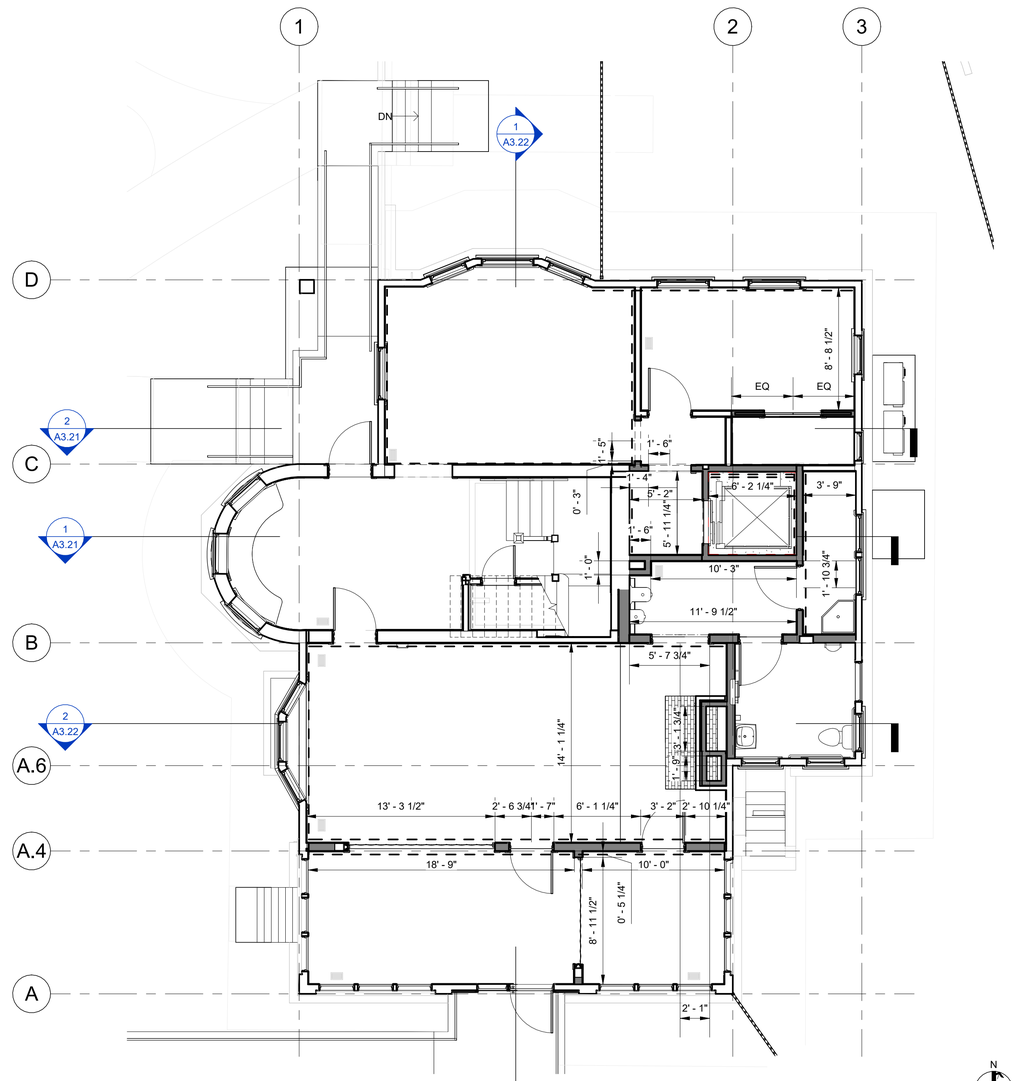

1 FRAMING PLAN - FIRST FLOOR
3/16" = 1'-0"

LEGEND

- (E) WALL FRAMING TO REMAIN, (N) FINISHES
- (N) WALL FRAMING, (N) FINISHES
- DOOR
- INFILL (E) OPENING
- PLYWOOD AT INT. WALL; AT SHEAR WALLS AND WALLS IN PLANE WITH SHEAR WALLS. S.S.D FOR STRUCTURAL SCOPE
- ADDT'L LAYER OF PLYWOOD FOR LULA LIFT SUPPORT; SEE MANUF. INSTRUCTIONS & PARTITION TYPES

CLIENT

GENERAL SERVICES AGENCY COUNTY OF ALAMEDA

ALAMEDA COUNTY

NOTE: If this drawing is not 22"x34" it has been revised from its original size and the scales noted on drawing/details are no longer applicable.

© 2022 Shah Kawasaki Architects

Revision Number	DATE	ISSUE DESCRIPTION
	09/03/2026	PERMIT SET

Project

WHITECOTTON COTTAGE REHABILITATION

15400 FOOTHILL BLVD
SAN LEANDRO, CA 94578

Architect of Record

P&T

Consultant

PAGE & TURNBULL
170 MAIDEN LANE, 5TH FLOOR
SAN FRANCISCO, CA

LICENSED ARCHITECT
PETER BIRBROIR
C23030
EX.4/30/2027
STATE OF CALIFORNIA

Drawing Title

FRAMING PLAN - FIRST FLOOR

Drawing No.

A2.32

SKA Project Number: 25001

GENERAL NOTES:

1. VERIFY ALL DIMENSIONS IN FIELD
2. SEE PLANS FOR PARTITION TYPES
3. SEE A6.11 AND A6.12 FOR SIZES OF DOOR OPENINGS

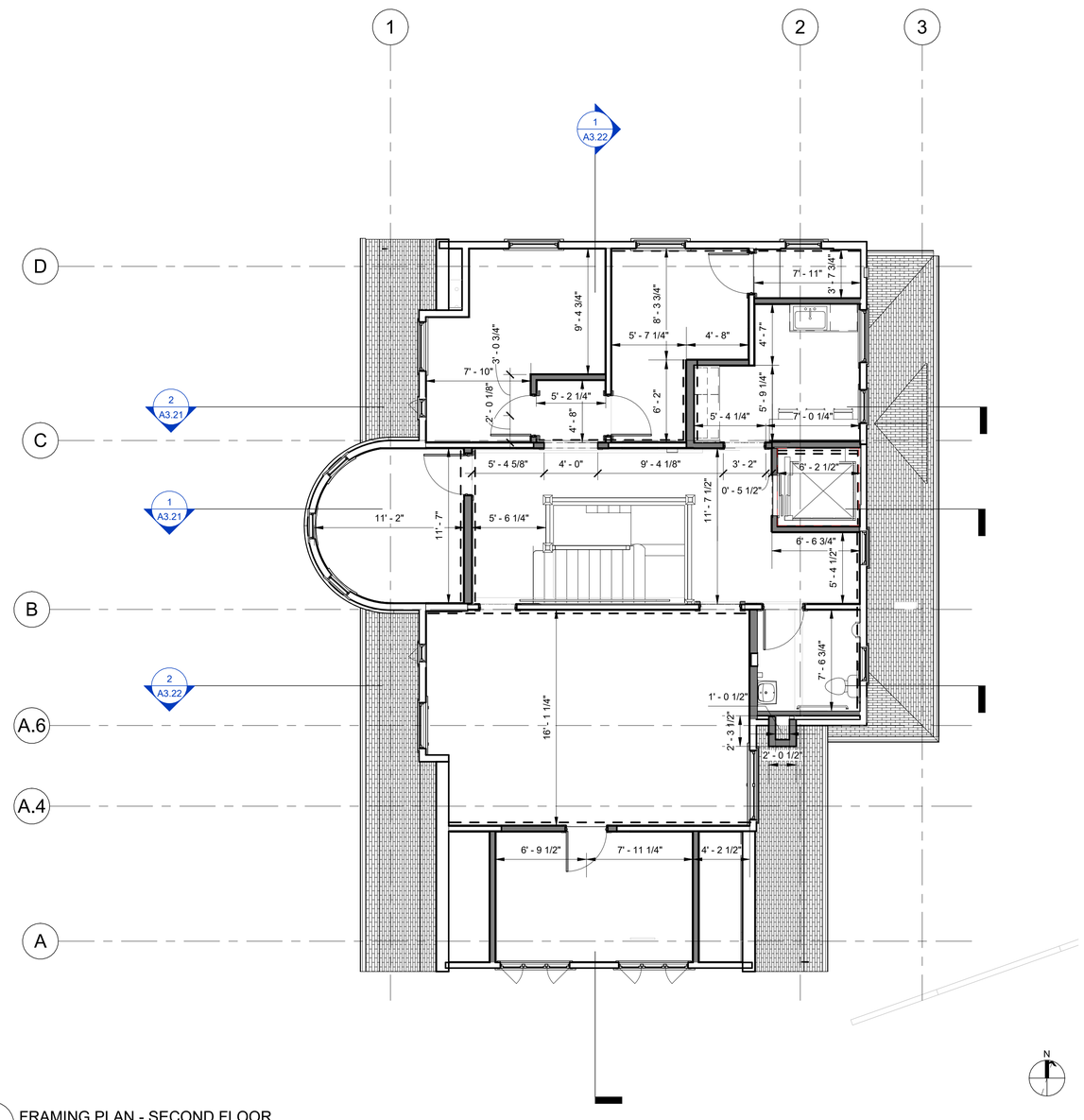

1 FRAMING PLAN - SECOND FLOOR
3/16" = 1'-0"

LEGEND

- (E) WALL FRAMING TO REMAIN, (N) FINISHES
- (N) WALL FRAMING, (N) FINISHES
- DOOR
- INFILL (E) OPENING
- PLYWOOD AT INT. WALL; AT SHEAR WALLS AND WALLS IN PLANE WITH SHEAR WALLS. S.S.D FOR STRUCTURAL SCOPE
- ADDT'L LAYER OF PLYWOOD FOR LULA LIFT SUPPORT; SEE MANUF. INSTRUCTIONS & PARTITION TYPES

CLIENT

GENERAL SERVICES AGENCY GSA COUNTY OF ALAMEDA

ALAMEDA COUNTY

NOTE: If this drawing is not 22"x34" it has been revised from its original size and the scales noted on drawing/details are no longer applicable.

© 2022 Shah Kawasaki Architects

Revision Number	DATE	ISSUE DESCRIPTION
	09/03/2026	PERMIT SET

Project

WHITECOTTON COTTAGE REHABILITATION

15400 FOOTHILL BLVD
SAN LEANDRO, CA 94578

Architect of Record

P&T

Consultant

PAGE & TURNBULL
170 MAIDEN LANE, 5TH FLOOR
SAN FRANCISCO, CA

LICENSED ARCHITECT
PETER BIRMINGHAM
C23016
EX.4/30/2027
STATE OF CALIFORNIA

Drawing Title

FRAMING PLAN - SECOND FLOOR

Drawing No.

A2.33

SKA Project Number: 25001

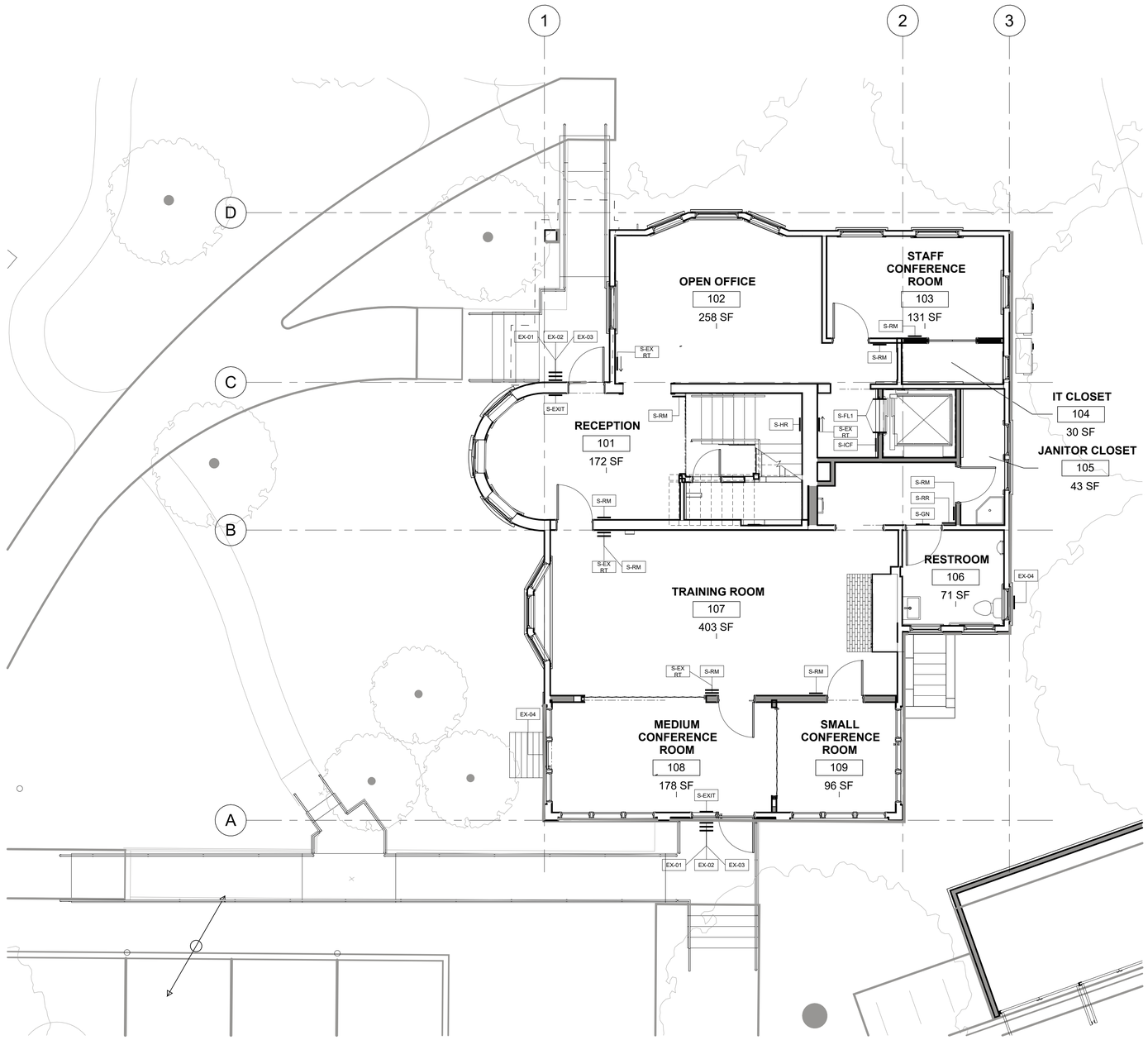

SIGNAGE FLOOR PLAN - LEVEL 1 | 1

3/16" = 1'-0"

SIGNAGE NOTES

1. SEE DETAILS A0.05 & A0.06 FOR SIGNAGE MOUNTING AND HEIGHT INFORMATION.
2. REFER TO MECHANICAL DRAWINGS FOR SIGNAGE RELATED TO MECHANICAL EQUIPMENT.
3. REFER TO PLUMBING DRAWINGS FOR SIGNAGE RELATED TO PLUMBING AND FIRE SPRINKLER SYSTEM EQUIPMENT.
4. REFER TO ELECTRICAL DRAWINGS FOR SIGNAGE RELATED TO ELECTRICAL EQUIPMENT
5. REFER TO REFLECTED CEILING PLANS AND ELECTRICAL PLANS FOR ILLUMINATED EXIT SIGNS.
6. SEE SHEET A0.05 & A0.06 SIGNAGE DETAILS
7. FOR ACCESSIBLE PARKING (PER CBC 11B-502) VEHICLE SPACE, ACCESS AISLE, STRIPING, PARKING IDENTIFICATION, CURB RAMP (11B-406.4) & TRUNCATED DOME DETAILS (11B-705.1) SEE SHEET A1.01. SEE CIVIL DRAWINGS FOR OTHER SITE IMPROVEMENTS
8. WHERE SIGNAGE IS MOUNTED ON GLASS, PROVIDE MATCHING BLANK PLATE ON OPPOSITE SIDE, ALIGN WITH SIGN.
9. ALL SIGNS ARE CONTRACTOR PROVIDED AND INSTALLED, UON.
10. SEE CIVIL AND LANDSCAPE DRAWINGS FOR ADDITIONAL SITE SIGNAGE
11. CONFIRM FINAL LOCATIONS OF ALL SIGNAGE WITH CITY AND ARCHITECT PRIOR TO MOUNTING
12. WHERE SIGNS ARE LOCATED ON THE SITE, PROVIDE 2" GALV. PIPE POLE SET IN CONCRETE BASE @ HEIGHT INDICATED PER ARCHITECTURAL AND CIVIL DRAWING DETAILS
13. FOR SITE SIGNAGE, SEE SITE PLAN SHEET A1.01 & C4.02

SIGNAGE TYPE SCHEDULE

SIGN TYPE	SIGNAGE INFO	DETAIL REFERENCE
EX-01	ISA SYMBOL	A13/A0.05
EX-02	CAUTION AUTOMATIC DOOR	A9/A0.05
EX-03	NO SMOKING SIGN	A5/A0.05
EX-04	NON-FUNCTIONING HISTORIC DOOR	E12/A0.05
S-EX RT	EXIT ROUTE	A7/A0.06
S-EXIT	EXIT SIGNAGE	A1/A0.06
S-FL1	ELEVATOR SIGNAGE	J7/A0.05
S-FL2	ELEVATOR SIGNAGE	J7/A0.05
S-GN	GENDER NEUTRAL RESTOOM GEOMETRIC SYMBOL DOOR SIGN	E1/A0.05
S-HR	LOW HEADROOM	A1/A0.05
S-ICF	IN CASE OF FIRE USE STAIR	J1/A0.05
S-RM	ROOM IDENTIFICATION SIGN	E12/A0.05
S-RR	RESTROOM IDENTIFICATION	E7/A0.05

SIGNAGE CONTENT SCHEDULE

ROOM NO	SIGN TYPE	SIGNAGE INFO	TEXT ON SIGN
-	EX-01	ISA SYMBOL	
-	EX-02	CAUTION AUTOMATIC DOOR	
-	EX-03	NO SMOKING SIGN	
-	EX-04	NON-FUNCTIONING HISTORIC DOOR	
101	S-EXIT	EXIT SIGNAGE	
101	S-RM	ROOM IDENTIFICATION SIGN	RECEPTION
102	S-EX RT	EXIT ROUTE	
102	S-RM	ROOM IDENTIFICATION SIGN	OPEN OFFICE
103	S-RM	ROOM IDENTIFICATION SIGN	CONFERENCE ROOM
104	S-RM	ROOM IDENTIFICATION SIGN	IT CLOSET
105	S-RM	ROOM IDENTIFICATION SIGN	JANITOR CLOSET
106	S-GN	GENDER NEUTRAL RESTOOM GEOMETRIC SYMBOL DOOR SIGN	
106	S-RR	RESTROOM IDENTIFICATION	ALL-GENDER RESTROOM
107	S-EX RT	EXIT ROUTE	
107	S-RM	ROOM IDENTIFICATION SIGN	TRAINING ROOM
108	S-EX RT	EXIT ROUTE	
108	S-EXIT	EXIT SIGNAGE	
108	S-RM	ROOM IDENTIFICATION SIGN	CONFERENCE ROOM
109	S-RM	ROOM IDENTIFICATION SIGN	CONFERENCE ROOM
202	S-RM	ROOM IDENTIFICATION SIGN	MEETING ROOM
203	S-RM	ROOM IDENTIFICATION SIGN	OFFICE
204	S-RM	ROOM IDENTIFICATION SIGN	OFFICE
205	S-RM	ROOM IDENTIFICATION SIGN	BREAK ROOM
206	S-GN	GENDER NEUTRAL RESTOOM GEOMETRIC SYMBOL DOOR SIGN	
206	S-RR	RESTROOM IDENTIFICATION	ALL-GENDER RESTROOM
207	S-EX RT	EXIT ROUTE	
207	S-RM	ROOM IDENTIFICATION SIGN	OPEN OFFICE
208	S-RM	ROOM IDENTIFICATION SIGN	OFFICE
210	S-RM	ROOM IDENTIFICATION SIGN	MECHANICAL
EL-1	S-EX RT	EXIT ROUTE	
EL-1	S-FL1	ELEVATOR SIGNAGE	
EL-1	S-ICF	IN CASE OF FIRE USE STAIR	
EL-2	S-FL2	ELEVATOR SIGNAGE	
EL-2	S-ICF	IN CASE OF FIRE USE STAIR	
ST-1	S-HR	LOW HEADROOM	
ST-2	S-EX RT	EXIT ROUTE	
ST-2	S-HR	LOW HEADROOM	

CLIENT

Alameda County

General Services Agency

1401 Lakeside Drive, 10th floor,
Oakland, CA 94612

NOTE: If this drawing is not 22"x34" it has been revised from its original size and the scales noted on drawing/details are no longer applicable.

© 2022 Shah Kawasaki Architects

Revision Number	DATE	ISSUE DESCRIPTION
	09/03/2026	PERMIT SET

Project

Whitecotton Cottage Rehabilitation

15400 Foothill Blvd
San Leandro, CA 94578

Architect of Record

P&T

Consultant

LICENSED ARCHITECT
PETER BIRABREN
C23028
EX.4/30/2027
STATE OF CALIFORNIA

Drawing Title

L1 SIGNAGE PLAN

Drawing No.

A2.41

SKA Project Number: 25709.00

NOT FOR CONSTRUCTION

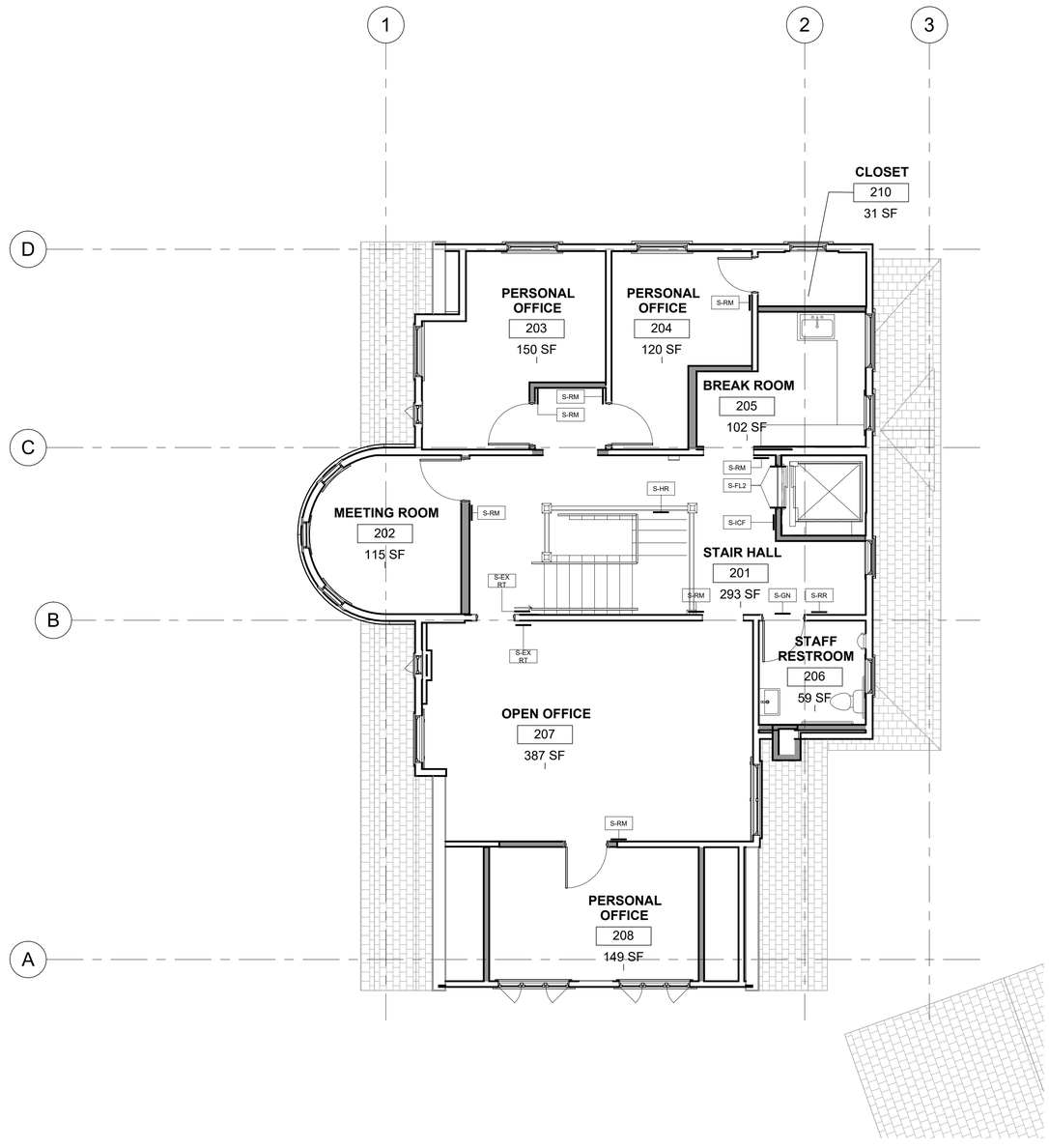

SIGNAGE FLOOR PLAN - LEVEL 2 | 1
3/16" = 1'-0"

CLIENT

Alameda County

General Services Agency

1401 Lakeside Drive, 10th floor,
Oakland, CA 94612

NOTE: If this drawing is not 22"x34" it has been revised from its original size and the scales noted on drawing/details are no longer applicable.

© 2022 Shah Kawasaki Architects

Revision Number	DATE	ISSUE DESCRIPTION
	09/03/2026	PERMIT SET

Project

Whitecotton Cottage Rehabilitation

15400 Foothill Blvd
San Leandro, CA 94578

Architect of Record

P&T

Consultant

LICENSED ARCHITECT
CHRISTER BIRKEMO
C23018
EX. 4/30/2027
STATE OF CALIFORNIA

Drawing Title
L2 SIGNAGE PLAN

Drawing No.
A2.42

SKA Project Number: 25709.00

NOT FOR CONSTRUCTION

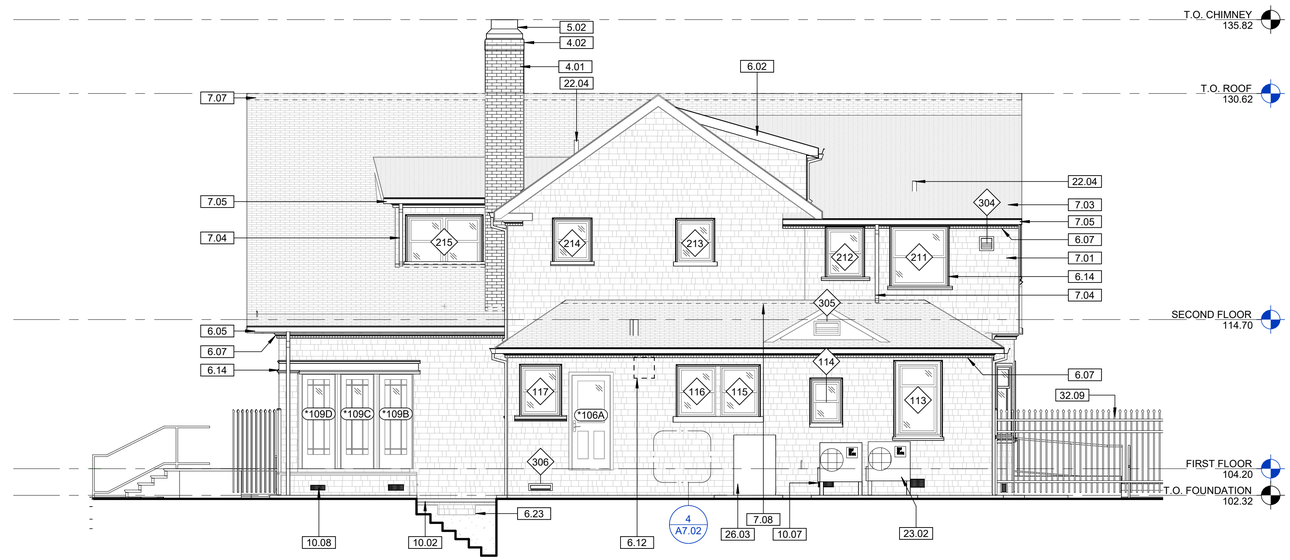

2 EXTERIOR ELEVATION - EAST
3/16" = 1'-0"

1 EXTERIOR ELEVATION - NORTH
3/16" = 1'-0"

KEYNOTE LEGEND

KEY VALUE	KEYNOTE TEXT
4.01	CHIMNEY BUILT TO MATCH HISTORIC DIMENSIONS. THIN BRICK VENEER TO MATCH (E) BRICK OVER WOOD FRAMED STRUCTURE. SEE DETAILS
4.02	DECORATIVE BRICKWORK AT TOP OF CHIMNEY TO MATCH (E)
5.02	PAINTED METAL CHIMNEY CAP
6.02	(N) ROOF FRAMING FOR LULA LIFT OVERRUN. SIDEWALLS W/ PAINTED WOOD SHINGLE FINISH TO MATCH ADJ.
6.05	PAINTED WOOD EAVE TO MATCH (E), W/ EAVE VENTS, TYP.
6.07	PAINTED WOOD PROFILES AND DENTIL TRIM TO MATCH HISTORIC, TYP.
6.12	INFILL WALL AT LOCATION OF DEMOLISHED KITCHEN VENT, MATCH ADJACENT FINISHES.
6.14	PAINTED WOOD WINDOW AND DOOR TRIM, INCLUDING CASING AND SILLS, TO MATCH HISTORIC, TYP.
6.23	INFILL (E) CONC. OPENING W/ WOOD FRAMING & TYP. SHINGLE FINISH
7.01	PAINTED EXTERIOR WOOD SHINGLES TO MATCH HISTORIC, SEE 1/A7.02
7.03	EXTERIOR ROOF SYSTEM CONSTRUCTED OF COMPOSITE ASPHALT SHINGLES O/ ROOFING UNDERLAYMENT O/ 1/2" PLYWOOD O/ (E) ROOF FRAMING W/ PTD METAL FLASHING, TYP.
7.04	PAINTED METAL DOWNSPOUT. SPLASH BLOCKS AT DOWNSPOUT OUTLETS AT GRADE, TYP.
7.05	PAINTED METAL GUTTER, TYP.
7.06	DECORATIVE SHINGLE PATTERN AT TURRET, SEE DETAIL 2/A7.02.
7.07	CONTINUOUS RIDGE VENT, SEE DETAILS, TYP.
7.08	CONTINUOUS HEADWALL VENT, SEE DETAILS, TYP.
7.09	CUSTOM FORMED PAINTED METAL GUTTER SYSTEM AT RADIUS SECTIONS
9.01	PAINTED CEMENT PLASTER
10.02	PAINTED BASEMENT HATCH COVER.
10.07	CRAWL SPACE VENT BEYOND
10.08	6" X 12" CRAWL SPACE VENT, TYP.
22.04	VENT PIPE; S.P.D.
23.02	HEAT RECOVERY VRF CONDENSING UNIT; S.M.D.
26.03	TRANSFORMER; S.E.D. ENSURE 6'-7" OVERHEAD CLEARANCE.
32.02	PAINTED WOOD ACCESS RAMP WITH GALVANIZED STEEL HANDRAILS
32.03	PAINTED WOOD STAIR ASSEMBLY WITH GALVANIZED STEEL HANDRAILS
32.04	REINFORCED CONCRETE PAD, S.C.D.
32.09	PTD. STEEL POST FENCING AND SECURITY GATES, S.L.D., TYP.

ELEVATION LEGEND

202 WINDOW OR LOUVER TAG; SEE HA6.21

200C DOOR TAG; SEE HA6.21

CLIENT

GENERAL SERVICES AGENCY GSA COUNTY OF ALAMEDA

ALAMEDA COUNTY

NOTE: If this drawing is not 22"x34" it has been revised from its original size and the scales noted on drawing/details are no longer applicable.

© 2022 Shah Kawasaki Architects

Revision Number	DATE	ISSUE DESCRIPTION
	09/03/2026	PERMIT SET

Project

WHITECOTTON COTTAGE REHABILITATION

15400 FOOTHILL BLVD
SAN LEANDRO, CA 94578

Architect of Record

P&T

Consultant

PAGE & TURNBULL
170 MAIDEN LANE, 5TH FLOOR
SAN FRANCISCO, CA

LICENSED ARCHITECT
PETER BIRKHEAD
C23018
EX.4/30/2027
STATE OF CALIFORNIA

Drawing Title

EXTERIOR ELEVATIONS - NORTH AND EAST

Drawing No.

A3.01

SKA Project Number: 25001

2 EXTERIOR ELEVATION - SOUTH
3/16" = 1'-0"

1 EXTERIOR ELEVATION - WEST
3/16" = 1'-0"

KEYNOTE LEGEND

KEY VALUE	KEYNOTE TEXT
4.01	CHIMNEY BUILT TO MATCH HISTORIC DIMENSIONS. THIN BRICK VENEER TO MATCH (E) BRICK OVER WOOD FRAMED STRUCTURE, SEE DETAILS
4.02	DECORATIVE BRICKWORK AT TOP OF CHIMNEY TO MATCH (E)
5.02	PAINTED METAL CHIMNEY CAP
6.05	PAINTED WOOD EAVE TO MATCH (E), W/ EAVE VENTS, TYP.
6.07	PAINTED WOOD PROFILES AND DENTIL TRIM TO MATCH HISTORIC, TYP.
6.11	WOOD CASING AT (N) DOORS TO MATCH (E), TYP.
6.13	DECORATIVE WOOD PANEL, MATCH PROFILES AND DIMENSIONS OF ADJACENT WINDOW LITES.
6.14	PAINTED WOOD WINDOW AND DOOR TRIM, INCLUDING CASING AND SILLS, TO MATCH HISTORIC, TYP.
7.01	PAINTED EXTERIOR WOOD SHINGLES TO MATCH HISTORIC, SEE 1/A7.02
7.03	EXTERIOR ROOF SYSTEM CONSTRUCTED OF COMPOSITE ASPHALT SHINGLES O/ ROOFING UNDERLAYMENT O/ 1/2" PLYWOOD O/ (E) ROOF FRAMING W/ PTD METAL FLASHING, TYP.
7.04	PAINTED METAL DOWNSPOUT. SPLASH BLOCKS AT DOWNSPOUT OUTLETS AT GRADE, TYP.
7.05	PAINTED METAL GUTTER, TYP.
7.06	DECORATIVE SHINGLE PATTERN AT TURRET, SEE DETAIL 2/A7.02.
7.07	CONTINUOUS RIDGE VENT, SEE DETAILS, TYP.
7.08	CONTINUOUS HEADWALL VENT, SEE DETAILS, TYP.
7.09	CUSTOM FORMED PAINTED METAL GUTTER SYSTEM AT RADIUS SECTIONS
10.08	6" X 12" CRAWL SPACE VENT, TYP.
22.04	VENT PIPE; S.P.D.
32.02	PAINTED WOOD ACCESS RAMP WITH GALVANIZED STEEL HANDRAILS
32.03	PAINTED WOOD STAIR ASSEMBLY WITH GALVANIZED STEEL HANDRAILS
32.09	PTD. STEEL POST FENCING AND SECURITY GATES, S.L.D., TYP.

ELEVATION LEGEND

202 WINDOW OR LOUVER TAG; SEE HA6.21

200C DOOR TAG; SEE HA6.21

CLIENT

ALAMEDA COUNTY

NOTE: If this drawing is not 22"x34" it has been revised from its original size and the scales noted on drawing/details are no longer applicable.

© 2022 Shah Kawasaki Architects

Revision Number	DATE	ISSUE DESCRIPTION
	09/03/2026	PERMIT SET

Project

WHITECOTTON COTTAGE REHABILITATION

15400 FOOTHILL BLVD
SAN LEANDRO, CA 94578

Architect of Record

P&T

Consultant

PAGE & TURNBULL
170 MAIDEN LANE, 5TH FLOOR
SAN FRANCISCO, CA

LICENSED ARCHITECT
JAYNER BITNER-GLINDZICZ
C23018
EX.4/30/2027
STATE OF CALIFORNIA

Drawing Title

EXTERIOR ELEVATIONS - SOUTH AND WEST

Drawing No.

A3.02

SKA Project Number: 25001

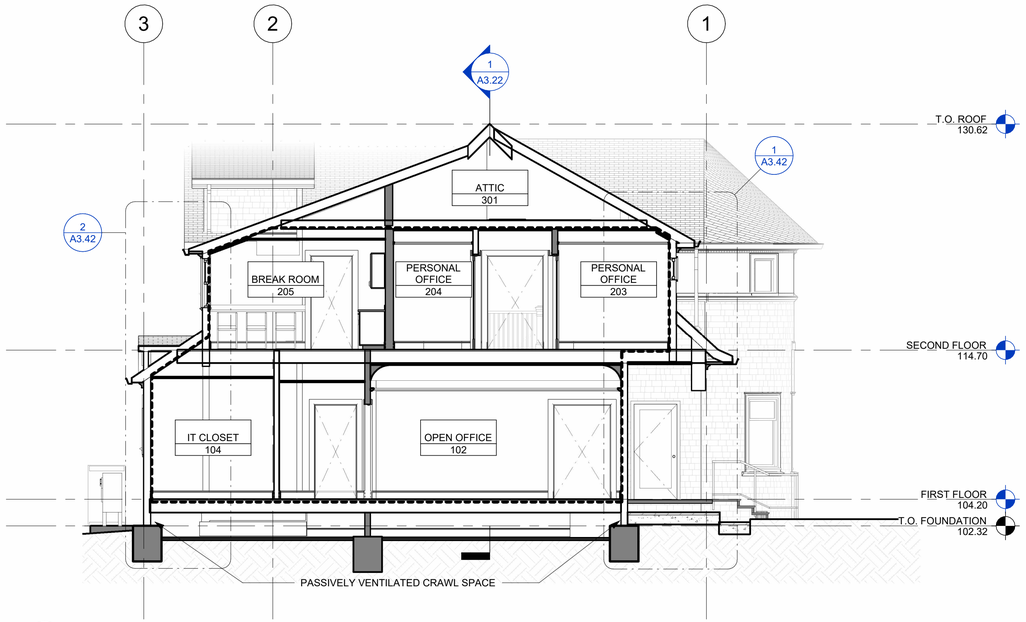

2 BUILDING SECTION - EAST/WEST
3/16" = 1'-0"

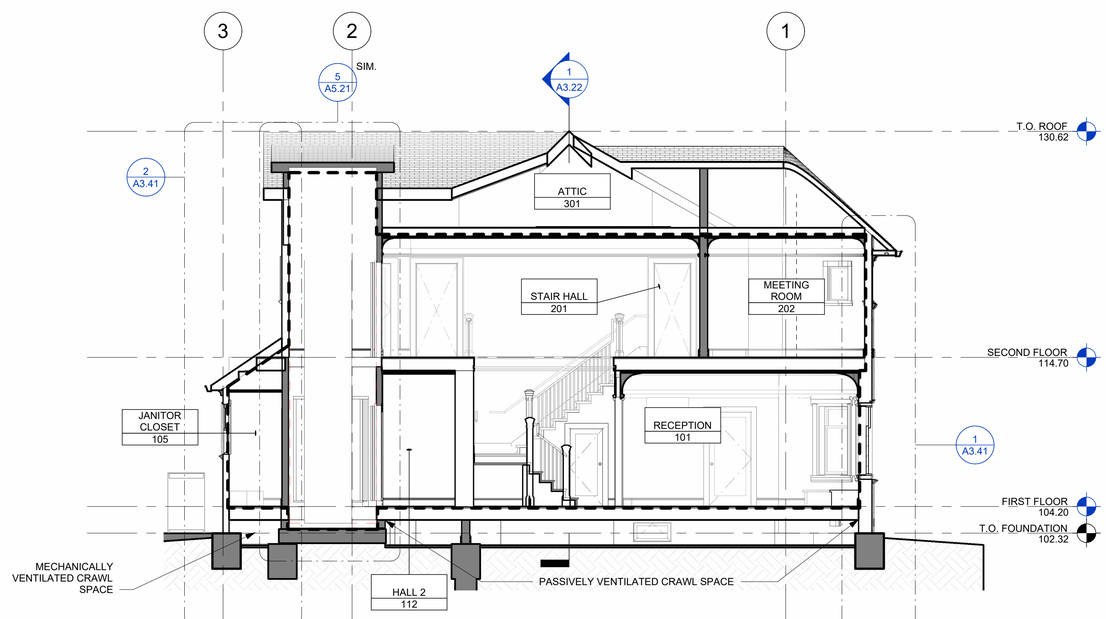

1 BUILDING SECTION - EAST/WEST
3/16" = 1'-0"

SECTION LEGEND

- - - THERMAL AND AIR BARRIER BOUNDARY; ENSURE ALL PENETRATIONS THROUGH THIS BOUNDARY ARE FULLY AIR SEALED

CLIENT

ALAMEDA COUNTY

NOTE: If this drawing is not 22"x34" it has been revised from its original size and the scales noted on drawing/details are no longer applicable.

© 2022 Shah Kawasaki Architects

Revision Number	DATE	ISSUE DESCRIPTION
	09/03/2026	PERMIT SET

Project

WHITECOTTON COTTAGE REHABILITATION

15400 FOOTHILL BLVD
SAN LEANDRO, CA 94578

Architect of Record

Consultant

PAGE & TURNBULL
170 MAIDEN LANE, 5TH FLOOR
SAN FRANCISCO, CA

LICENSED ARCHITECT
JENNIFER BITNER-KOCH
C23018
EX.4/30/2027
STATE OF CALIFORNIA

Drawing Title

BUILDING SECTIONS

Drawing No.

A3.21

SKA Project Number: 25001

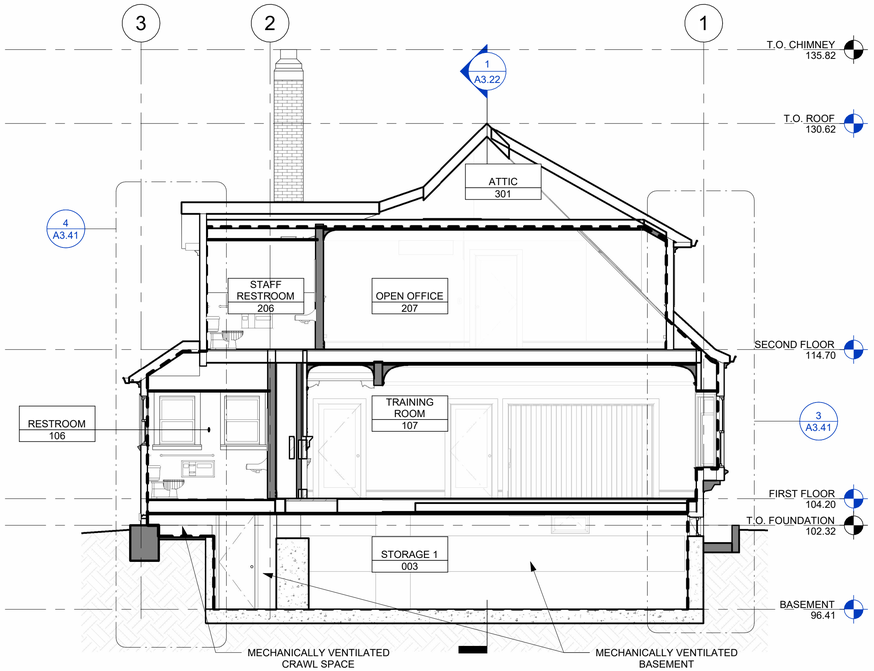

2 BUILDING SECTION - EAST/WEST
3/16" = 1'-0"

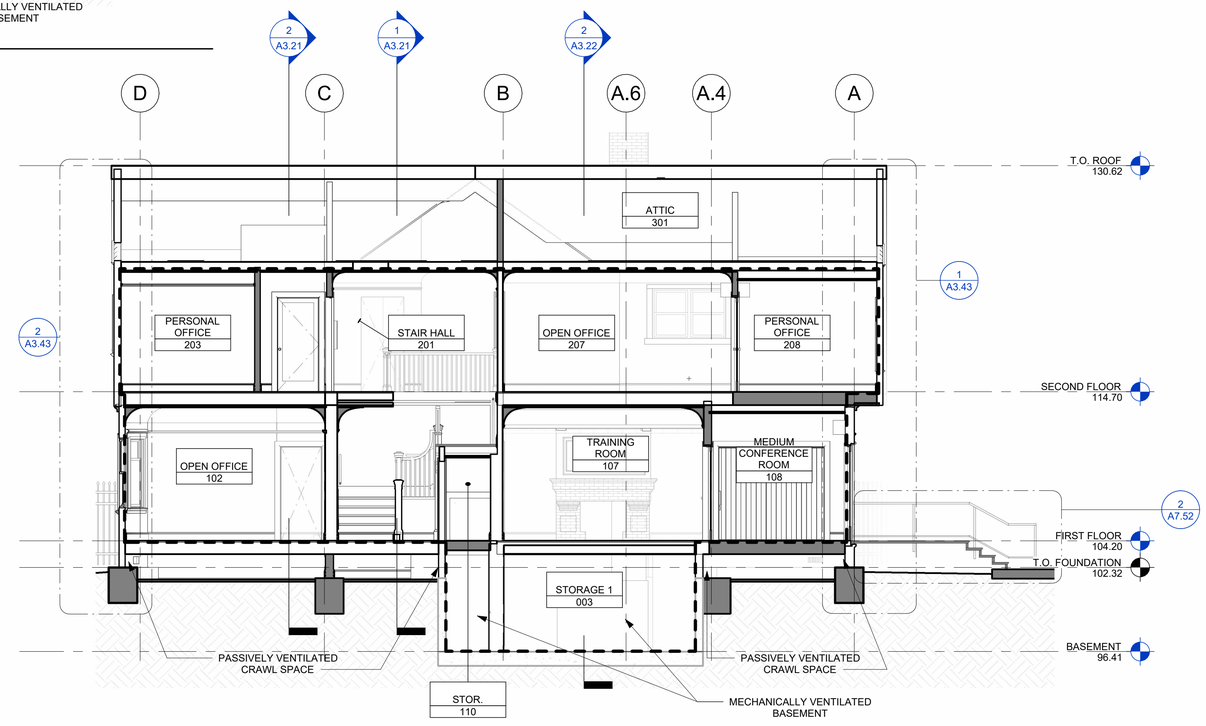

1 BUILDING SECTION - NORTH/SOUTH
3/16" = 1'-0"

SECTION LEGEND

- - - THERMAL AND AIR BARRIER BOUNDARY; ENSURE ALL PENETRATIONS THROUGH THIS BOUNDARY ARE FULLY AIR SEALED

CLIENT

ALAMEDA COUNTY

NOTE: If this drawing is not 22"x34" it has been revised from its original size and the scales noted on drawing/details are no longer applicable.

© 2022 Shah Kawasaki Architects

Revision Number	DATE	ISSUE DESCRIPTION
	09/03/2026	PERMIT SET

Project

WHITECOTTON COTTAGE REHABILITATION

15400 FOOTHILL BLVD
SAN LEANDRO, CA 94578

Architect of Record

Consultant

PAGE & TURNBULL
170 MAIDEN LANE, 5TH FLOOR
SAN FRANCISCO, CA

LICENSED ARCHITECT PETER BIRDINGER C23018 EX.4/30/2027 STATE OF CALIFORNIA

Drawing Title
BUILDING SECTIONS

Drawing No.
A3.22

SKA Project Number: 25001

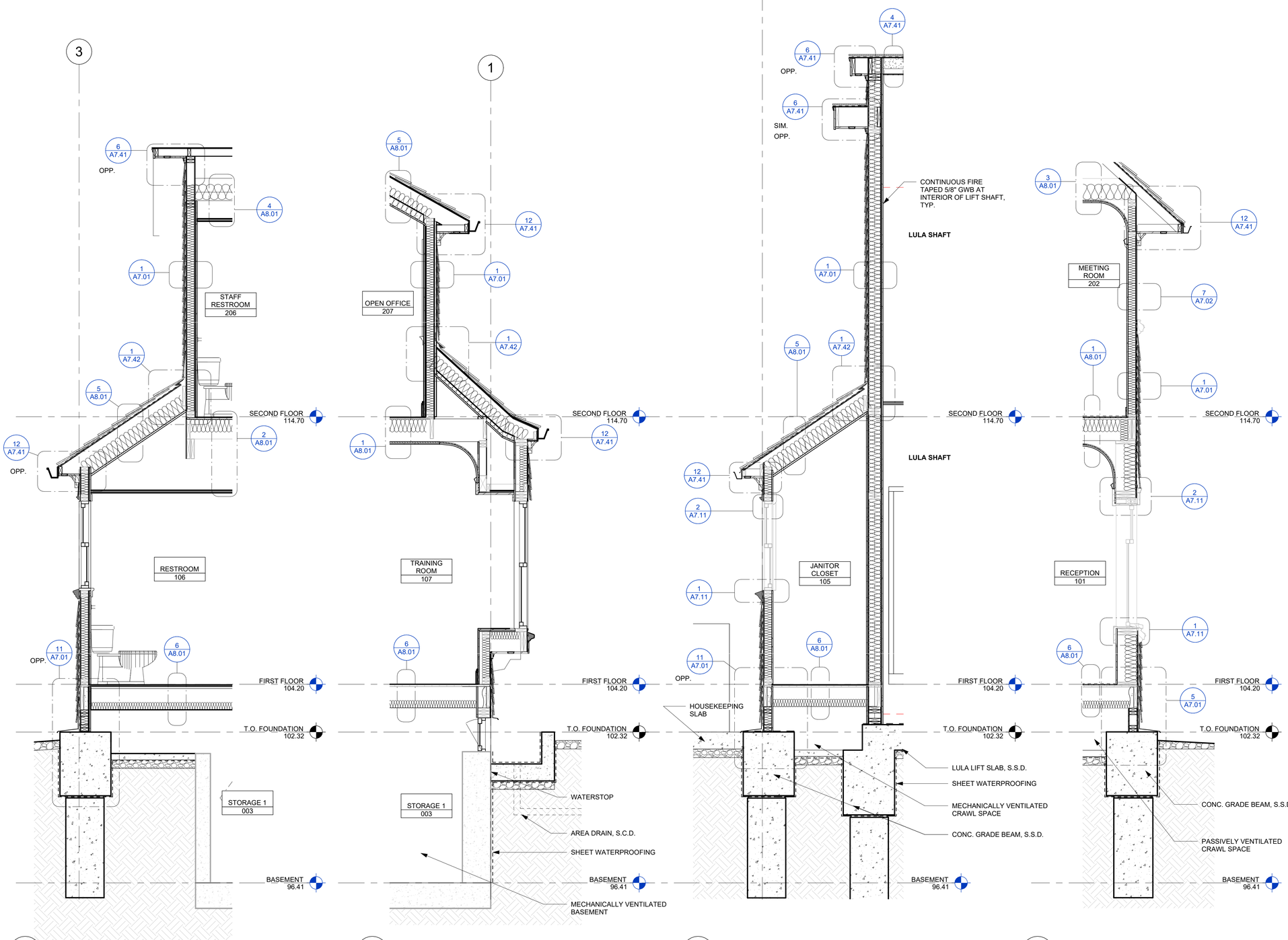

4 WALL SECTION - EAST FACADE
1/2" = 1'-0"

3 WALL SECTION - WEST FACADE
1/2" = 1'-0"

2 WALL SECTION - EAST FACADE
1/2" = 1'-0"

1 WALL SECTION - WEST FACADE
1/2" = 1'-0"

CLIENT

GENERAL SERVICES AGENCY GSA COUNTY OF ALAMEDA

ALAMEDA COUNTY

NOTE: If this drawing is not 22"x34" it has been revised from its original size and the scales noted on drawing/details are no longer applicable.

© 2022 Shah Kawasaki Architects

Revision Number	DATE	ISSUE DESCRIPTION
	09/03/2026	PERMIT SET

Project

WHITECOTTON COTTAGE REHABILITATION

15400 FOOTHILL BLVD
SAN LEANDRO, CA 94578

Architect of Record

P&T

Consultant

PAGE & TURNBULL
170 MAIDEN LANE, 5TH FLOOR
SAN FRANCISCO, CA

LICENSED ARCHITECT PETER BIRDSOCK C23030 EX.4/30/2027 STATE OF CALIFORNIA

Drawing Title

WALL SECTIONS

Drawing No.

A3.41

SKA Project Number: 25001

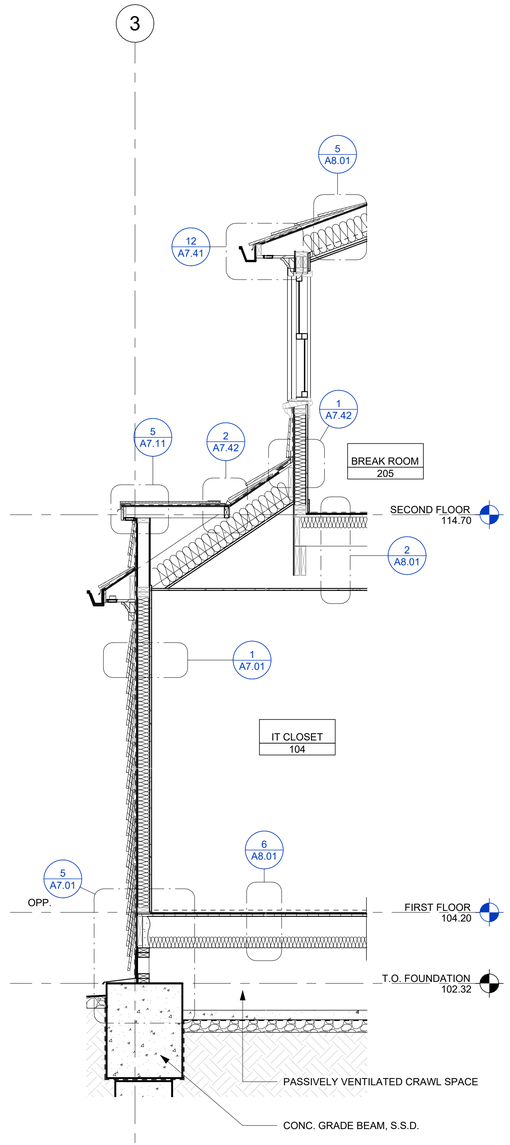

2 WALL SECTION - WEST FACADE
1/2" = 1'-0"

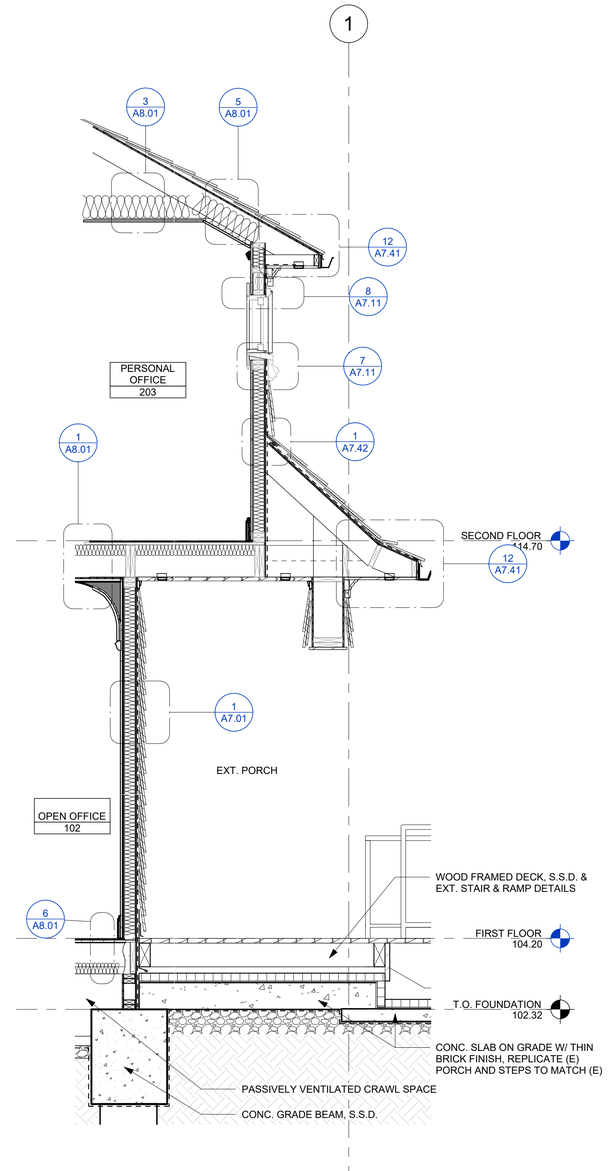

1 WALL SECTION - WEST FACADE
1/2" = 1'-0"

CLIENT

GENERAL SERVICES AGENCY
GSA
COUNTY OF ALAMEDA

ALAMEDA COUNTY

NOTE: If this drawing is not 22"x34" it has been revised from its original size and the scales noted on drawing/details are no longer applicable.

© 2022 Shah Kawasaki Architects

Revision Number	DATE	ISSUE DESCRIPTION
	09/03/2026	PERMIT SET

Project

WHITECOTTON COTTAGE REHABILITATION

15400 FOOTHILL BLVD
SAN LEANDRO, CA 94578

Architect of Record

P&T

Consultant

PAGE & TURNBULL
170 MAIDEN LANE, 5TH FLOOR
SAN FRANCISCO, CA

LICENSED ARCHITECT
PETER BIREDOUX
C23016
EX.4/30/2027
STATE OF CALIFORNIA

Drawing Title
WALL SECTIONS

Drawing No.
A3.42

SKA Project Number: 25001

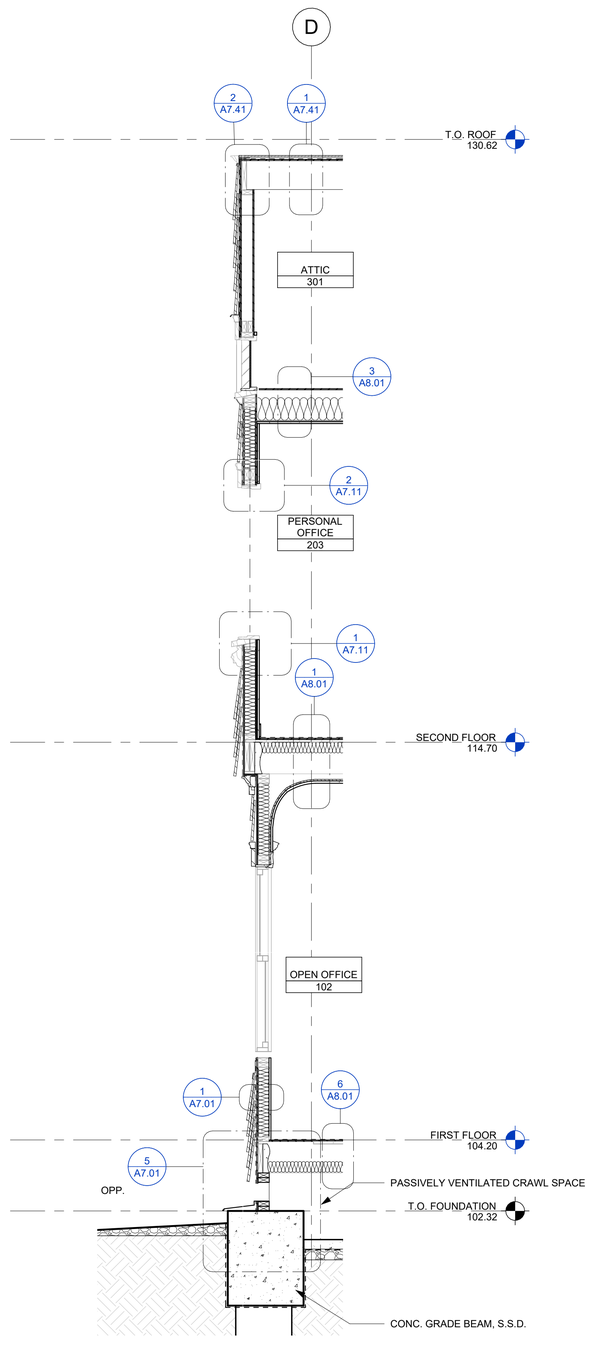

2 WALL SECTION - NORTH FACADE
1/2" = 1'-0"

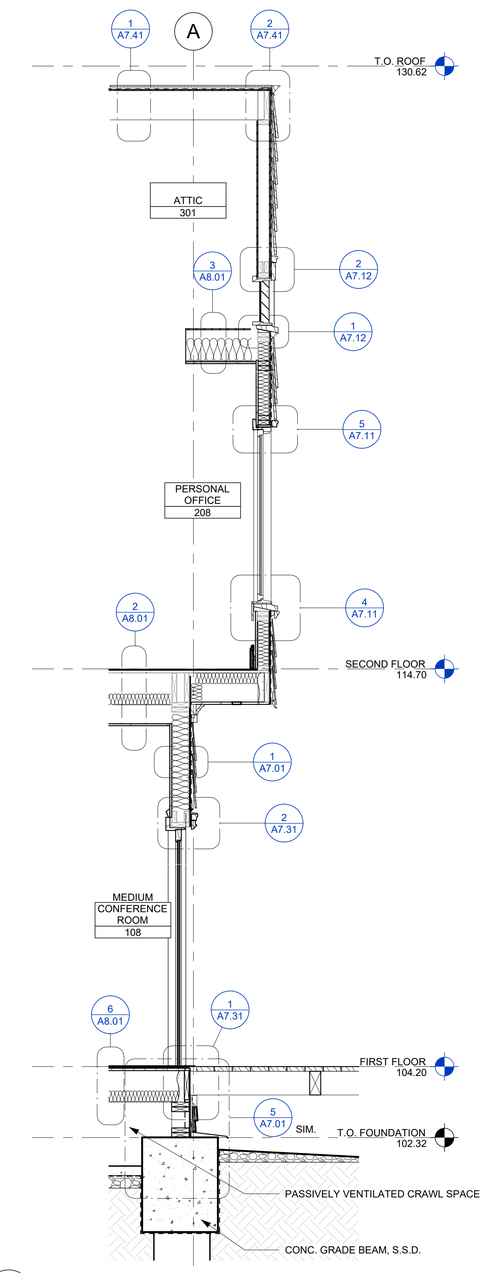

1 WALL SECTION - SOUTH FACADE
1/2" = 1'-0"

CLIENT

GENERAL SERVICES AGENCY GSA COUNTY OF ALAMEDA

ALAMEDA COUNTY

NOTE: If this drawing is not 22"x34" it has been revised from its original size and the scales noted on drawing/details are no longer applicable.

© 2022 Shah Kawasaki Architects

Revision Number	DATE	ISSUE DESCRIPTION
	09/03/2026	PERMIT SET

Project

WHITECOTTON COTTAGE REHABILITATION

15400 FOOTHILL BLVD
SAN LEANDRO, CA 94578

Architect of Record

P&T

Consultant

PAGE & TURNBULL
170 MAIDEN LANE, 5TH FLOOR
SAN FRANCISCO, CA

LICENSED ARCHITECT
PETER BITRENKO
C23018
EX.4/30/2027
STATE OF CALIFORNIA

Drawing Title

WALL SECTIONS

Drawing No.

A3.43

SKA Project Number: 25001

GENERAL NOTES:

1. SEE ROOM FINISH SHEDULE ON SHEET A6.41.
2. SEE DOOR SCHEDULE ON SHEET A6.11 AND A6.12
3. SEE WINDOW SCHEDULE ON SHEET A6.21

KEYNOTE LEGEND

KEY VALUE	KEYNOTE TEXT
10.13	ACCESSIBLE RECESSED MOUNTED FOLD- DOWN BABY CHANGING STATION WITH WALL HOOK
10.14	RECESSED TOILET ACCESSORIES - TOILET PAPER, TRASH, SEAT PROTECTOR
10.15	RECESSED COMBINATION TOWEL AND WASTE UNIT
10.16	SURFACE MOUNTED SOAP DISPENSER
10.17	CHANNEL FRAME MIRROR
10.18	LAVATORY - WALL MOUNTED
10.19	WATER CLOSET
12.03	TOILET FIXTURES, LINOLEUM FLOOR, GRAB BARS, FRP WALL FINISHES, AND MISCELLANEOUS ACCESSORIES.
22.02	FLOOR DRAIN; SLOPE FLOORING TO DRAIN; S.P.D.

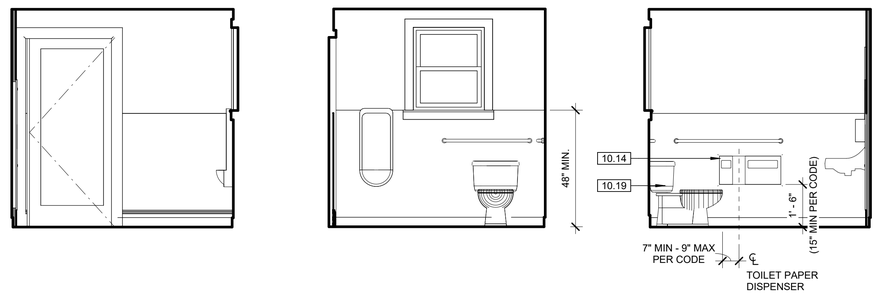

4A | NORTH

4B | EAST

4C | SOUTH

4D | WEST

4 RESTROOM 206
3/8" = 1-0"

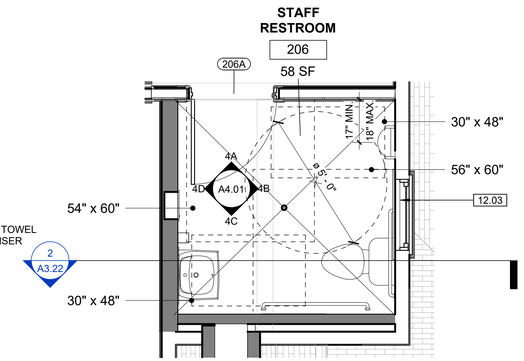

3 ENLARGED FLOOR PLAN - SECOND FLOOR
3/8" = 1'-0"

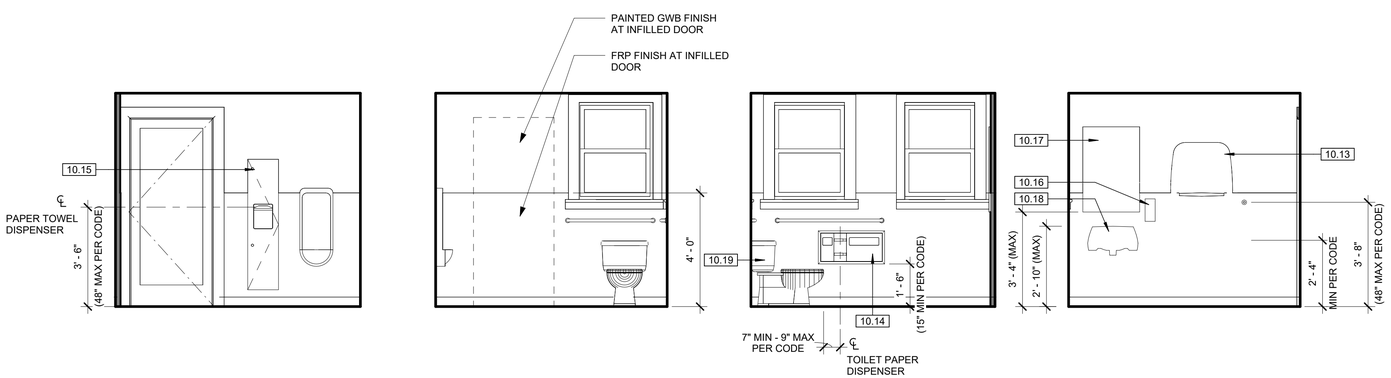

2A | NORTH

2B | EAST

2C | SOUTH

2D | WEST

2 RESTROOM 106
3/8" = 1-0"

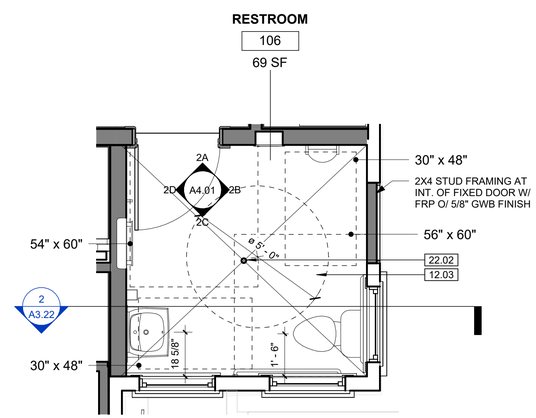

1 ENLARGED FLOOR PLAN - RESTROOM 106
3/8" = 1'-0"

CLIENT

ALAMEDA COUNTY

NOTE: If this drawing is not 22"x34" it has been revised from its original size and the scales noted on drawing/details are no longer applicable.

© 2022 Shah Kawasaki Architects

Revision Number	DATE	ISSUE DESCRIPTION
	09/03/2026	PERMIT SET

Project

WHITECOTTON COTTAGE REHABILITATION

15400 FOOTHILL BLVD
SAN LEANDRO, CA 94578

Architect of Record

P&T

Consultant

PAGE & TURNBULL
170 MAIEN LANE, 5TH FLOOR
SAN FRANCISCO, CA

LICENSED ARCHITECT
SAWYER BITNER
C23018
EX.4/30/2027
STATE OF CALIFORNIA

Drawing Title

ENLARGED PLANS & ELEVATIONS - RESTROOMS

Drawing No.

A4.01

SKA Project Number: 25001

SHELF SPACE WITHIN ACCESSIBLE REACH RANGE

MIN 15" - MAX 48" A.F.F.
MIN 50% ACCESSIBLE SHELF REQUIRED

	WIDTH	QTY	SUBTOTAL	
ACCESSSIBLE SHELF	39 IN	2	78 IN	
	24 IN	6	144 IN	
TOTAL ACCESSIBLE SHELF			**222 IN**	**51%**
NON-ACCESSIBLE SHELF	WIDTH (IN)	QTY	SUBTOTAL	
	39 IN	3	117 IN	
	24 IN	4	96 IN	
TOTAL NON-ACCESSIBLE SHELF			**213 IN**	**49%**

GENERAL NOTES:

1. SEE ROOM FINISH SHEDULE ON SHEET A6.41.
2. SEE DOOR SCHEDULE ON SHEET A6.11 AND A6.12
3. SEE WINDOW SCHEDULE ON SHEET A6.21

KEYNOTE LEGEND

KEY VALUE	KEYNOTE TEXT
6.24	(E) BASEBOARD TO BE SALVAGED AND REINSTALLED, TYP.
6.26	(E) DOOR FRAME TO BE SALVAGED AND REINSTALLED, TYP.
6.27	(E) WINDOW FRAME TO BE SALVAGED AND REINSTALLED, TYP.
12.02	PLAM CABINETS AND COUNTERS W/ 4" BACKSPLASH.
12.04	SCRIBE COUNTERTOP EDGE AT WINDOW TRIM
12.05	MATCHING FILL STRIPS AS NEEDED, TYP.
12.06	MAX 1/2" COUNTERTOP OVERHANG AT SIDES
22.05	ACCESSIBLE SINK W/ PARALLEL APPROACH
23.01	INTERIOR FAN COIL UNIT; S.M.D., TYP.

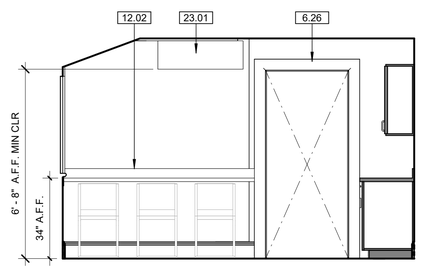

2C | SOUTH

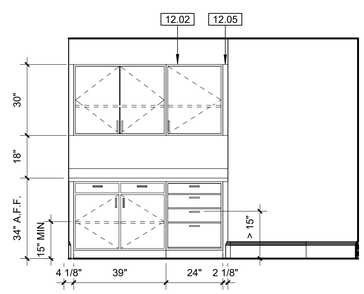

2D | WEST

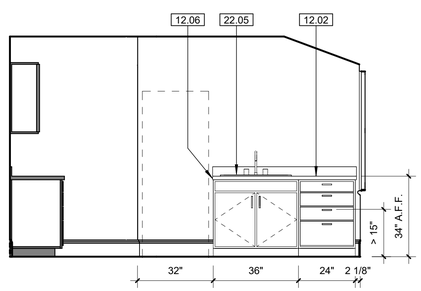

2A | NORTH

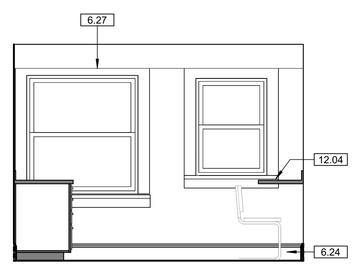

2B | EAST

2 INTERIOR ELEVATIONS - BREAK ROOM
3/8" = 1-0"

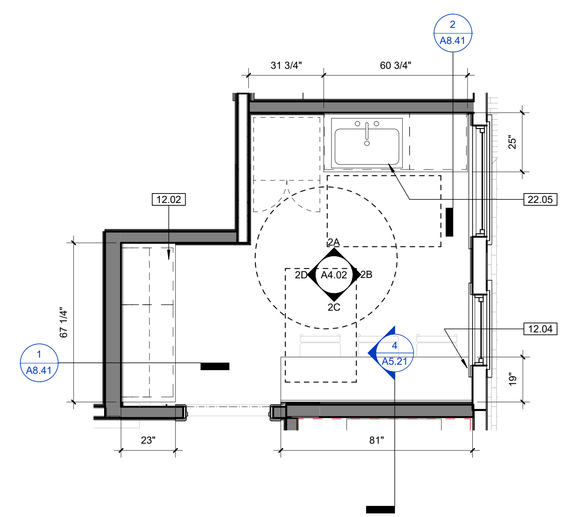

1 ENLARGED FLOOR PLAN - BREAK ROOM
3/8" = 1'-0"

CLIENT

GENERAL SERVICES AGENCY COUNTY OF ALAMEDA GSA

ALAMEDA COUNTY

NOTE: If this drawing is not 22"x34" it has been revised from its original size and the scales noted on drawing/details are no longer applicable.

© 2022 Shah Kawasaki Architects

Revision Number	DATE	ISSUE DESCRIPTION
	09/03/2026	PERMIT SET

Project

WHITECOTTON COTTAGE REHABILITATION

15400 FOOTHILL BLVD
SAN LEANDRO, CA 94578

Architect of Record

P&T

Consultant

PAGE & TURNBULL
170 MAIDEN LANE, 5TH FLOOR
SAN FRANCISCO, CA

LICENSED ARCHITECT
CHRISTER BIRKEMO
C23108
EX.4/30/2027
STATE OF CALIFORNIA

Drawing Title

ENLARGED PLANS & ELEVATIONS - BREAK ROOM

Drawing No.

A4.02

SKA Project Number: 25001

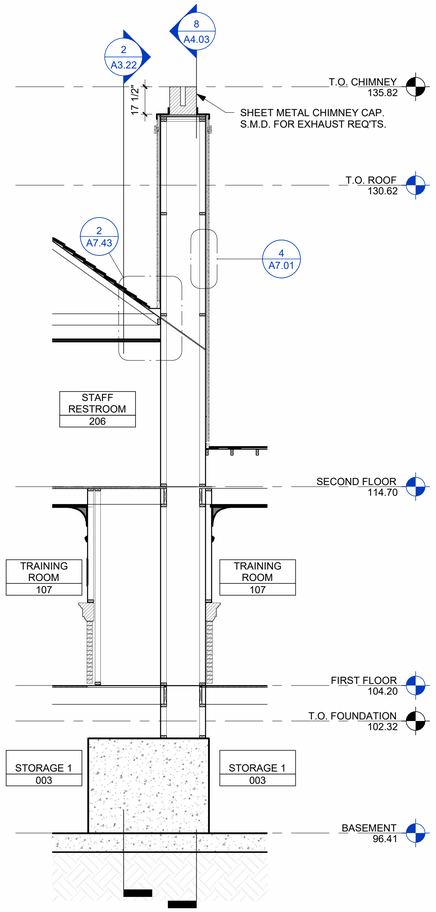

11 SECTION - CHIMNEY - NORTH/SOUTH
1/4" = 1'-0"

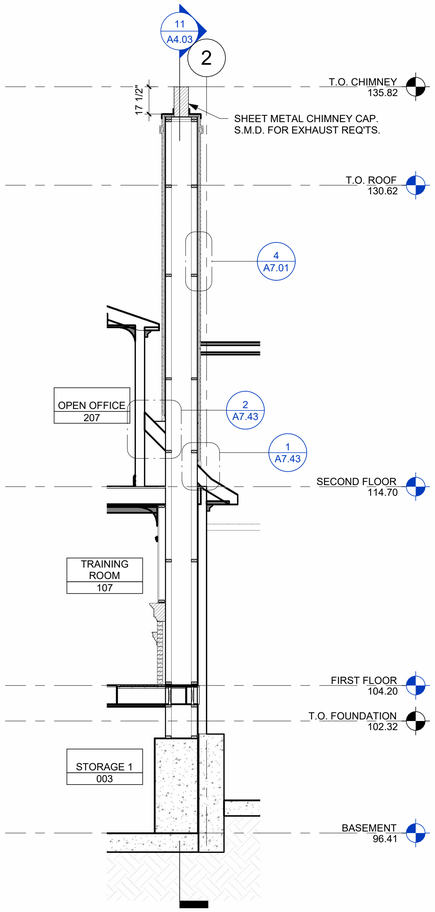

8 SECTION - CHIMNEY - EAST/WEST
1/4" = 1'-0"

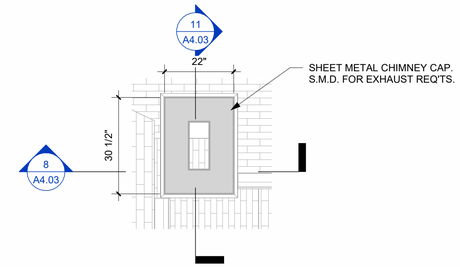

6 ENL. FLOOR PLAN - CHIMNEY - CAP
1/2" = 1'-0"

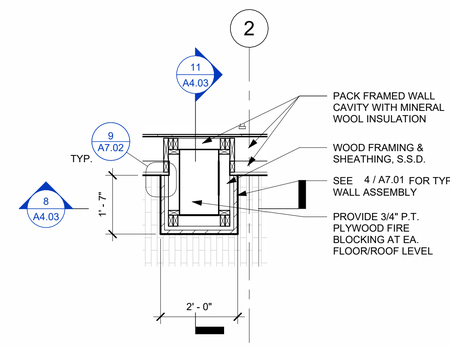

5 ENL. FLOOR PLAN - CHIMNEY - SECOND FLOOR
1/2" = 1'-0"

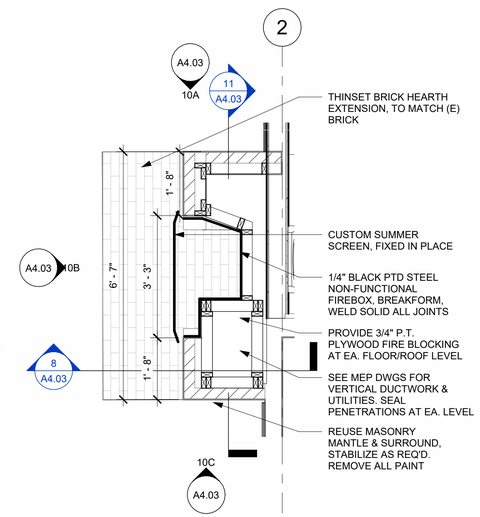

2 ENL. FLOOR PLAN - CHIMNEY - FIRST FLOOR
1/2" = 1'-0"

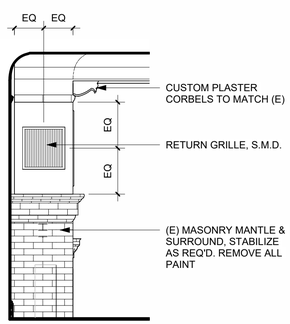

10A | NORTH

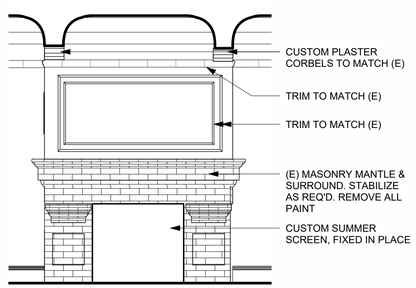

10B | WEST

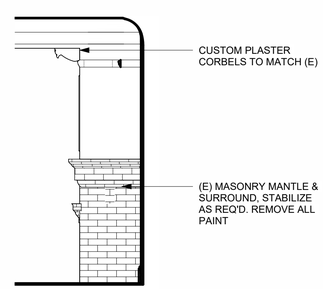

10C | SOUTH

10 FIREPLACE ENLARGED ELEVATIONS
3/8" = 1'-0"

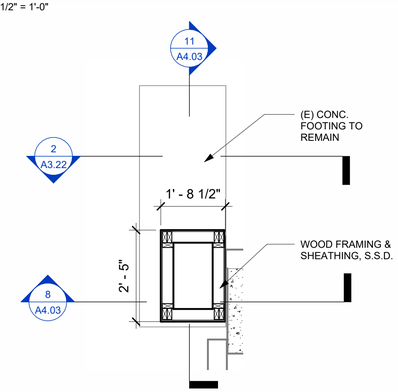

1 ENL. FLOOR PLAN - CHIMNEY - BASEMENT
1/2" = 1'-0"

CLIENT

GENERAL SERVICES AGENCY
GSA
COUNTY OF ALAMEDA

ALAMEDA COUNTY

NOTE: If this drawing is not 22"x34" it has been revised from its original size and the scales noted on drawing/details are no longer applicable.

© 2022 Shah Kawasaki Architects

Revision Number	DATE	ISSUE DESCRIPTION
	09/03/2026	PERMIT SET

Project

WHITECOTTON COTTAGE REHABILITATION

15400 FOOTHILL BLVD
SAN LEANDRO, CA 94578

Architect of Record

P&T

Consultant

PAGE & TURNBULL
170 MAIDEN LANE, 5TH FLOOR
SAN FRANCISCO, CA

LICENSED ARCHITECT
PETER BIRNBAUM
C23028
EX.4/30/2027
STATE OF CALIFORNIA

Drawing Title

ENLARGED PLANS & ELEVATIONS - CHIMNEY

Drawing No.

A4.03

SKA Project Number: 25001

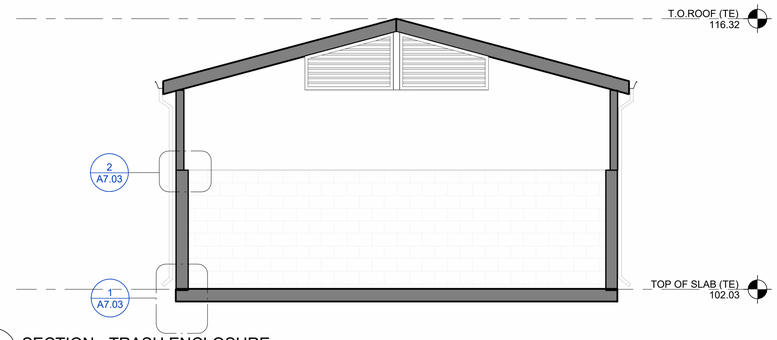

4 SECTION - TRASH ENCLOSURE
1/4" = 1'-0"

KEYNOTE LEGEND	
KEY VALUE	KEYNOTE TEXT
3.08	CONC. SPLASH BLOCK, TYP.
5.03	8"X8"X3/8" THICK FLUSH STEEL EMBED WITH 2-4" - #4 HOOKS EQUALLY SPACED
5.04	4"X4"X1/4" PAINTED GALVANIZED TUBE STEEL
5.05	7"X6'6"X3/8" THICK FLUSH STEEL EMBED WITH 4-4"-#4 HOOKS EQUALLY SPACED
7.03	EXTERIOR ROOF SYSTEM CONSTRUCTED OF COMPOSITE ASPHALT SHINGLES O/ ROOFING UNDERLAYMENT O/ 1/2" PLYWOOD O/ (E) ROOF FRAMING W/ PTD METAL FLASHING, TYP.
7.04	PAINTED METAL DOWNSPOUT. SPLASH BLOCKS AT DOWNSPOUT OUTLETS AT GRADE, TYP.
7.05	PAINTED METAL GUTTER, TYP.
7.07	CONTINUOUS RIDGE VENT, SEE DETAILS, TYP.
10.12	9'-2" X 3'-4" CITYSCAPES TOUGHGATE
32.04	REINFORCED CONCRETE PAD, S.C.D.
33.01	SEWER DRAIN, S.C.D.

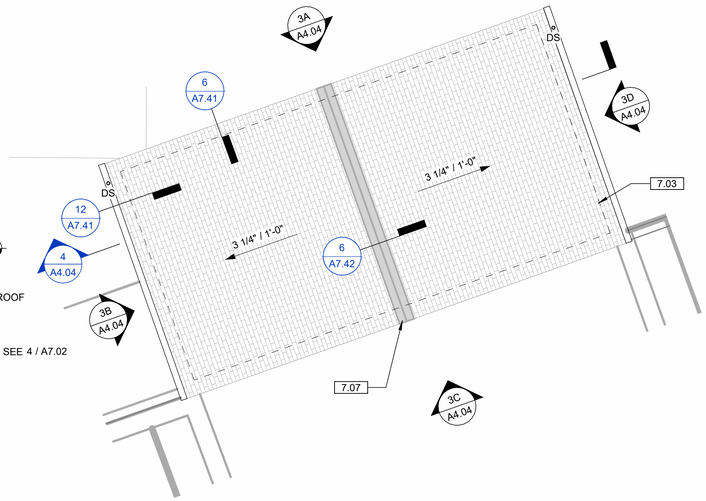

2 ROOF PLAN
1/4" = 1'-0"

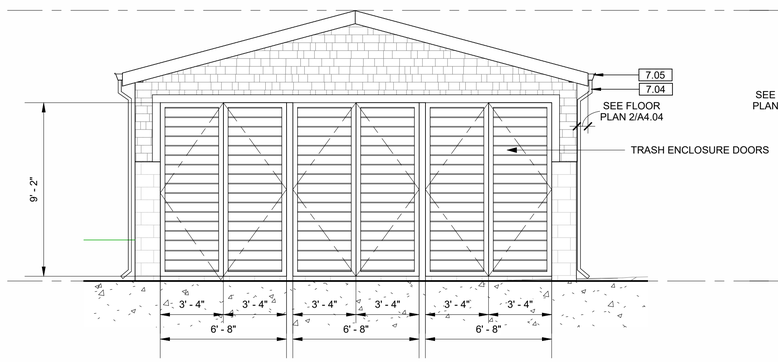

3C | SOUTH

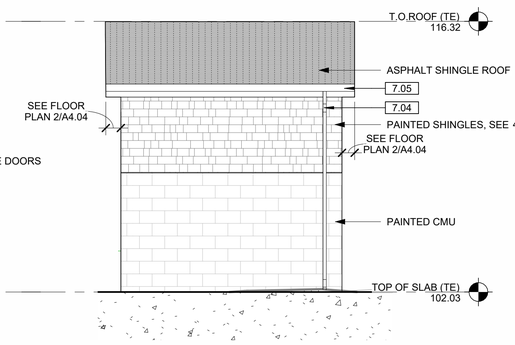

3D | EAST

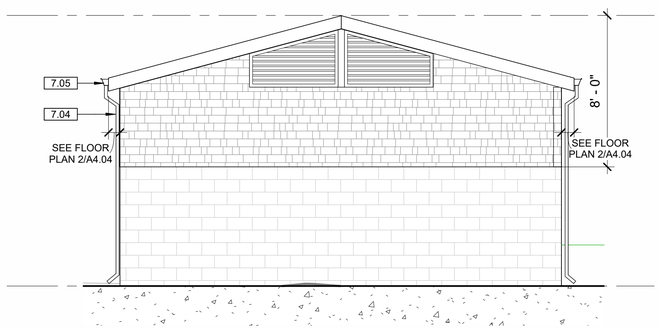

3A | NORTH

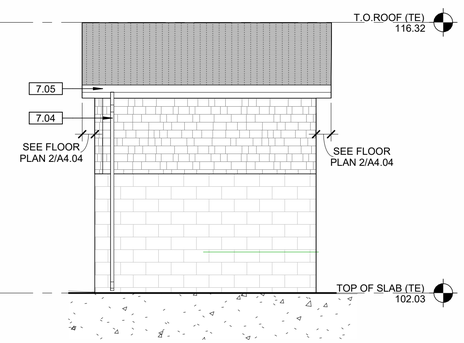

3B | WEST

3 ELEVATIONS - TRASH ENCLOSURE
3/8" = 1-0"

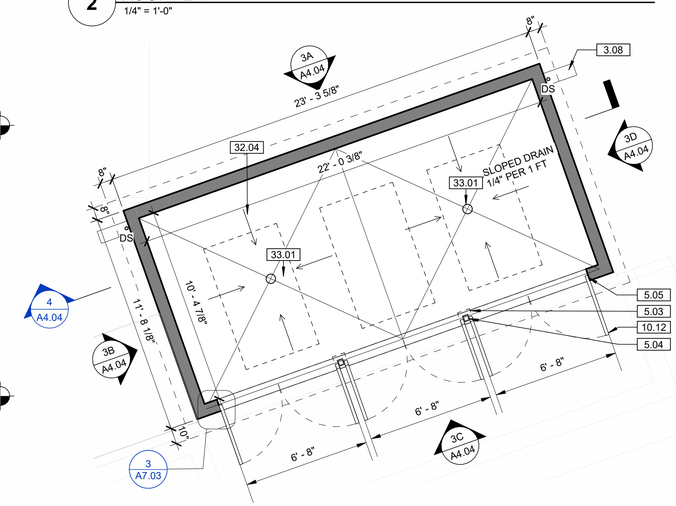

1 ENLARGED PLAN - TRASH ENCLOSURE
1/4" = 1'-0"

CLIENT

ALAMEDA COUNTY

NOTE: If this drawing is not 22"x34" it has been revised from its original size and the scales noted on drawing/details are no longer applicable.

© 2022 Shah Kawasaki Architects

Revision Number	DATE	ISSUE DESCRIPTION
	09/03/2026	PERMIT SET

Project

WHITECOTTON COTTAGE REHABILITATION

15400 FOOTHILL BLVD
SAN LEANDRO, CA 94578

Architect of Record

Consultant

PAGE & TURNBULL
170 MAIDEN LANE, 5TH FLOOR
SAN FRANCISCO, CA

LICENSED ARCHITECT
PETER BIREDOUX
C23016
EX.4/30/2027
STATE OF CALIFORNIA

Drawing Title

ENLARGED PLANS & ELEVATIONS - TRASH ENCLOSURE

Drawing No.

A4.04

SKA Project Number: 25001

GENERAL NOTES:

1. SEE ROOM FINISH SHEDULE ON SHEET A6.41.
2. SEE DOOR SCHEDULE ON SHEET A6.11 AND A6.12
3. SEE WINDOW SCHEDULE ON SHEET A6.21

KEYNOTE LEGEND

KEY VALUE	KEYNOTE TEXT
6.24	(E) BASEBOARD TO BE SALVAGED AND REINSTALLED, TYP.
6.25	(E) PICTURE RAIL TO BE SALVAGED AND REINSTALLED, TYP.
6.26	(E) DOOR FRAME TO BE SALVAGED AND REINSTALLED, TYP.
6.27	(E) WINDOW FRAME TO BE SALVAGED AND REINSTALLED, TYP.
10.01	69" X 92" RECESSED DROP DOWN PROJECTION SCREEN
10.04	SEMI-RECESSED FIRE EXTINGUISHER CABINET
23.01	INTERIOR FAN COIL UNIT; S.M.D., TYP.

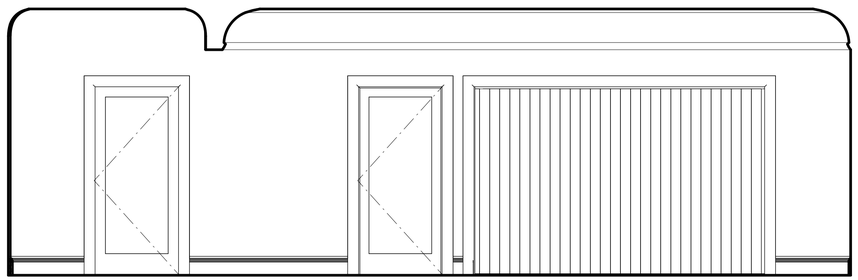

2C | SOUTH

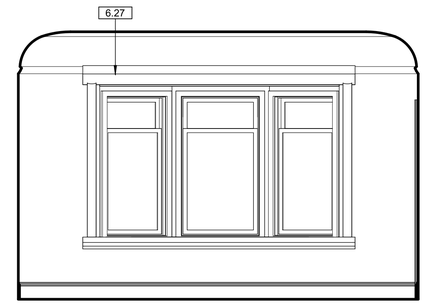

2D | WEST

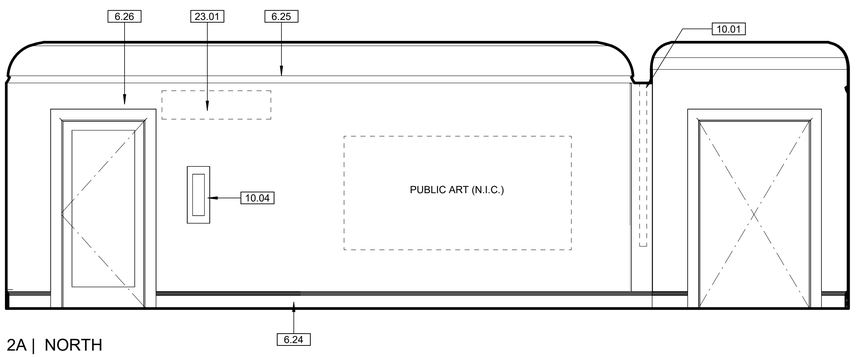

2A | NORTH

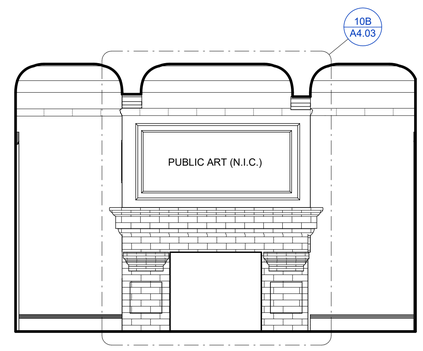

2B | EAST

2 INTERIOR ELEVATIONS - TRAINING ROOM
3/8" = 1-0"

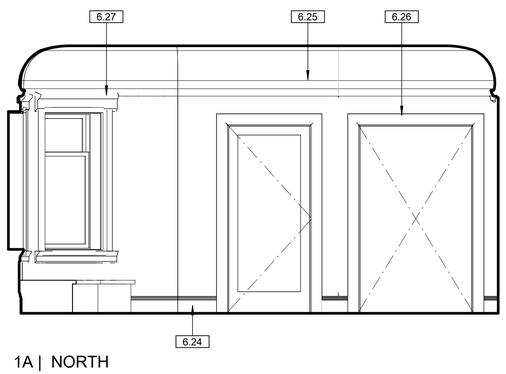

1A | NORTH

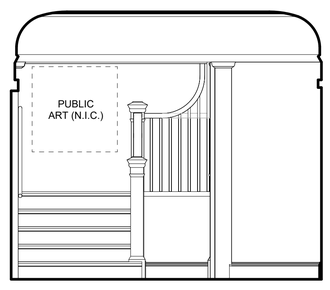

1B | EAST

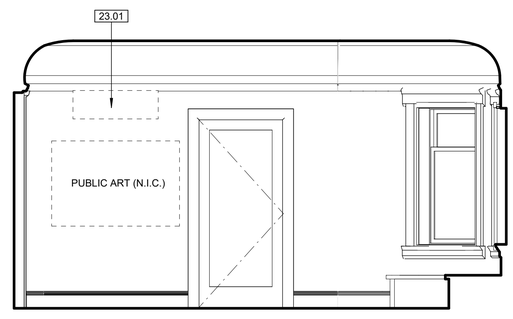

1C | SOUTH

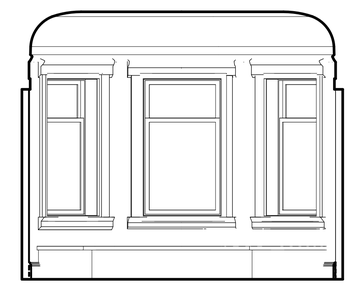

1D | WEST

1 INTERIOR ELEVATIONS - RECEPTION
3/8" = 1-0"

CLIENT

ALAMEDA COUNTY

NOTE: If this drawing is not 22"x34" it has been revised from its original size and the scales noted on drawing/details are no longer applicable.

© 2022 Shah Kawasaki Architects

Revision Number	DATE	ISSUE DESCRIPTION
	09/03/2026	PERMIT SET

Project

WHITECOTTON COTTAGE REHABILITATION

15400 FOOTHILL BLVD
SAN LEANDRO, CA 94578

Architect of Record

P&T

Consultant

PAGE & TURNBULL
170 MAIDEN LANE, 5TH FLOOR
SAN FRANCISCO, CA

LICENSED ARCHITECT
PETER BIRDINGER
C23018
EX.4/30/2027
STATE OF CALIFORNIA

Drawing Title
INTERIOR ELEVATIONS

Drawing No.
A4.11

SKA Project Number: 25001

GENERAL NOTES:

1. SEE ROOM FINISH SHEDULE ON SHEET A6.41.
2. SEE DOOR SCHEDULE ON SHEET A6.11 AND A6.12
3. SEE WINDOW SCHEDULE ON SHEET A6.21

KEYNOTE LEGEND

KEY VALUE	KEYNOTE TEXT
6.24	(E) BASEBOARD TO BE SALVAGED AND REINSTALLED, TYP.
6.25	(E) PICTURE RAIL TO BE SALVAGED AND REINSTALLED, TYP.
6.26	(E) DOOR FRAME TO BE SALVAGED AND REINSTALLED, TYP.
6.27	(E) WINDOW FRAME TO BE SALVAGED AND REINSTALLED, TYP.
22.01	DRINKING FOUNTAIN. S.P.D.
23.01	INTERIOR FAN COIL UNIT; S.M.D., TYP.

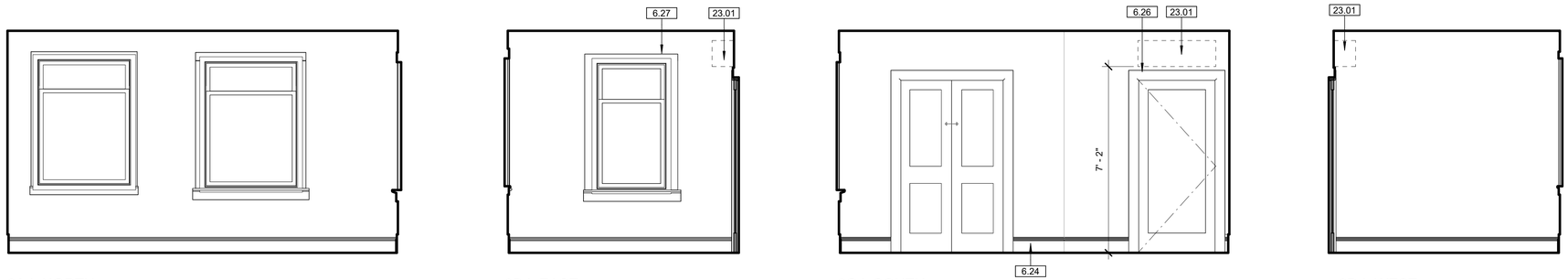

3A | NORTH

3B | EAST

3C | SOUTH

3D | WEST

3 INTERIOR ELEVATIONS - STAFF CONFERENCE ROOM
3/8" = 1-0"

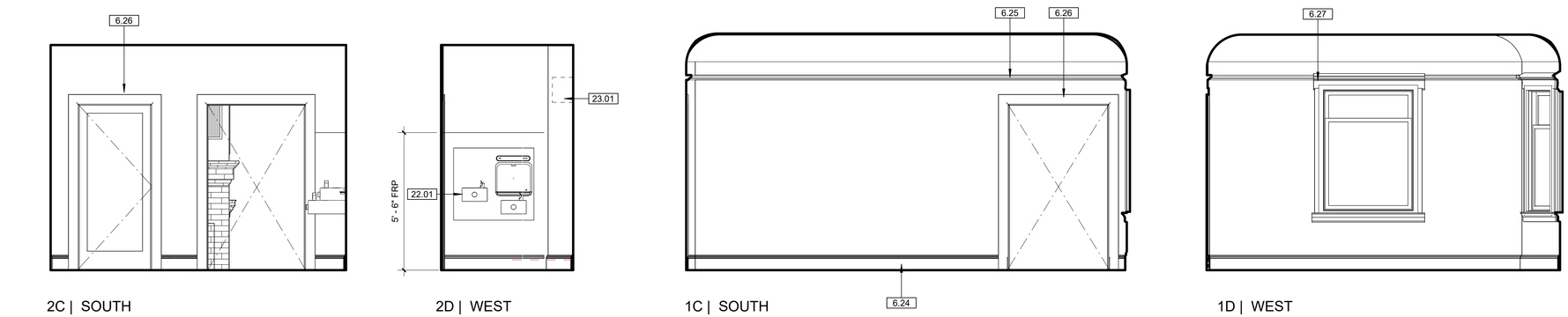

2C | SOUTH

2D | WEST

1C | SOUTH

1D | WEST

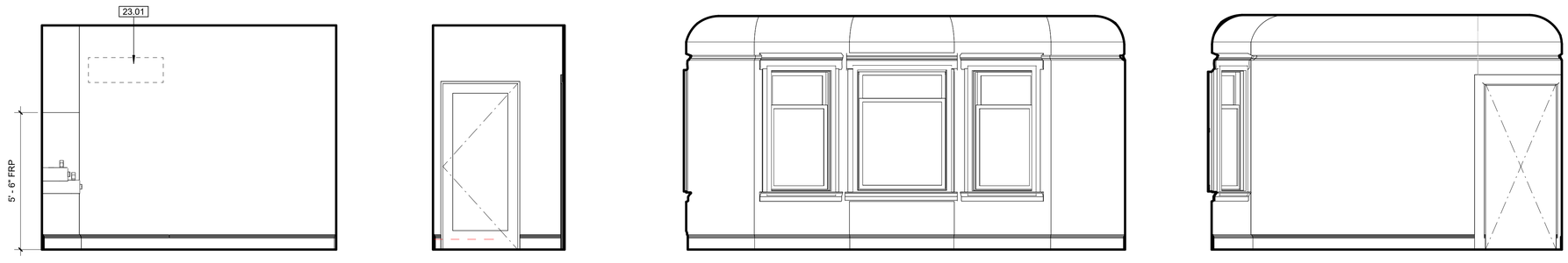

2A | NORTH

2B | EAST

1A | NORTH

1B | EAST

2 INTERIOR ELEVATIONS - HALL 1
3/8" = 1-0"

1 INTERIOR ELEVATIONS - OPEN OFFICE 102
3/8" = 1-0"

CLIENT

ALAMEDA COUNTY

NOTE: If this drawing is not 22"x34" it has been revised from its original size and the scales noted on drawing/details are no longer applicable.

© 2022 Shah Kawasaki Architects

Revision Number	DATE	ISSUE DESCRIPTION
	09/03/2026	PERMIT SET

Project

WHITECOTTON COTTAGE REHABILITATION

15400 FOOTHILL BLVD
SAN LEANDRO, CA 94578

Architect of Record

P&T

Consultant

PAGE & TURNBULL
170 MAIDEN LANE, 5TH FLOOR
SAN FRANCISCO, CA

LICENSED ARCHITECT
PETER BIRKINSHAW
C23018
EX.4/30/2027
STATE OF CALIFORNIA

Drawing Title

INTERIOR ELEVATIONS

Drawing No.

A4.12

SKA Project Number: 25001

GENERAL NOTES:

1. SEE ROOM FINISH SHEDULE ON SHEET A6.41.
2. SEE DOOR SCHEDULE ON SHEET A6.11 AND A6.12
3. SEE WINDOW SCHEDULE ON SHEET A6.21

KEYNOTE LEGEND

KEY VALUE	KEYNOTE TEXT
6.24	(E) BASEBOARD TO BE SALVAGED AND REINSTALLED, TYP.
6.26	(E) DOOR FRAME TO BE SALVAGED AND REINSTALLED, TYP.
23.01	INTERIOR FAN COIL UNIT; S.M.D., TYP.

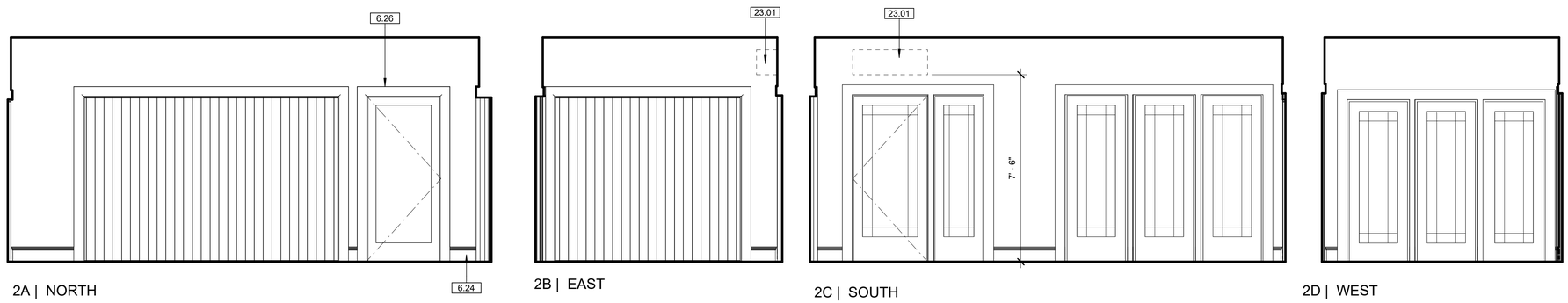

2A | NORTH

2B | EAST

2C | SOUTH

2D | WEST

2 INTERIOR ELEVATIONS - MEDIUM CONFERENCE ROOM
3/8" = 1-0"

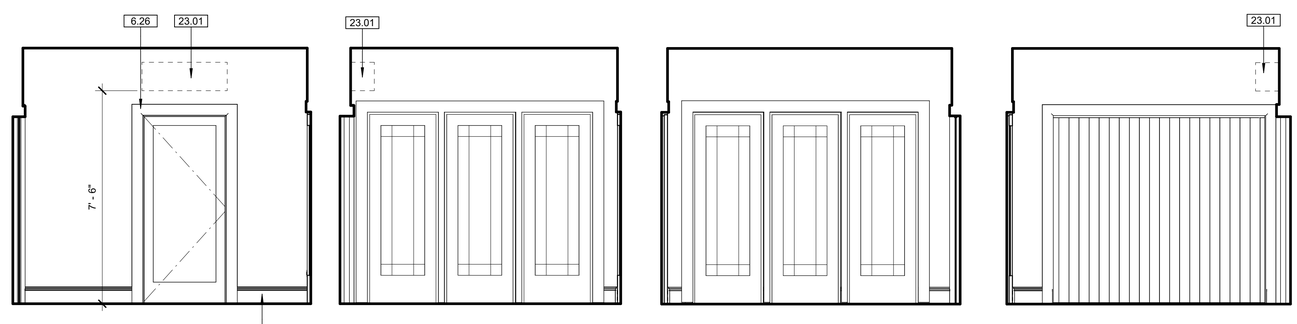

1A | NORTH

1B | EAST

1C | SOUTH

1D | WEST

1 INTERIOR ELEVATIONS - SMALL CONFERENCE ROOM
3/8" = 1-0"

CLIENT

ALAMEDA COUNTY

NOTE: If this drawing is not 22"x34" it has been revised from its original size and the scales noted on drawing/details are no longer applicable.

© 2022 Shah Kawasaki Architects

Revision Number	DATE	ISSUE DESCRIPTION
	09/03/2026	PERMIT SET

Project

WHITECOTTON COTTAGE REHABILITATION

15400 FOOTHILL BLVD
SAN LEANDRO, CA 94578

Architect of Record

Consultant

PAGE & TURNBULL
170 MAIDEN LANE, 5TH FLOOR
SAN FRANCISCO, CA

LICENSED ARCHITECT
PETER BIRKHOLZ
C23030
EX.4/30/2027
STATE OF CALIFORNIA

Drawing Title

INTERIOR ELEVATIONS

Drawing No.

A4.13

SKA Project Number: 25001

GENERAL NOTES:

1. SEE ROOM FINISH SHEDULE ON SHEET A6.41.
2. SEE DOOR SCHEDULE ON SHEET A6.11 AND A6.12
3. SEE WINDOW SCHEDULE ON SHEET A6.21

KEYNOTE LEGEND

KEY VALUE	KEYNOTE TEXT
6.24	(E) BASEBOARD TO BE SALVAGED AND REINSTALLED, TYP.
6.25	(E) PICTURE RAIL TO BE SALVAGED AND REINSTALLED, TYP.
6.26	(E) DOOR FRAME TO BE SALVAGED AND REINSTALLED, TYP.
6.27	(E) WINDOW FRAME TO BE SALVAGED AND REINSTALLED, TYP.
23.01	INTERIOR FAN COIL UNIT; S.M.D., TYP.

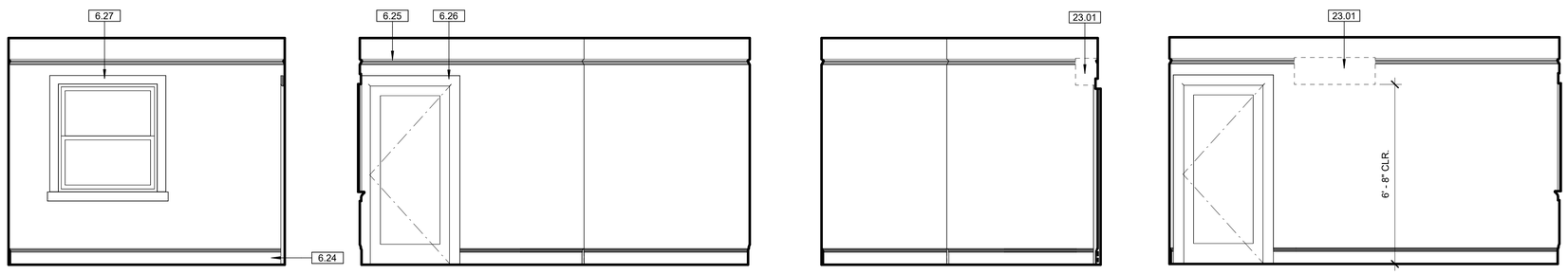

2A | NORTH

2B | EAST

2C | SOUTH

2D | WEST

2 INTERIOR ELEVATIONS - PRIVATE OFFICE 204
3/8" = 1-0"

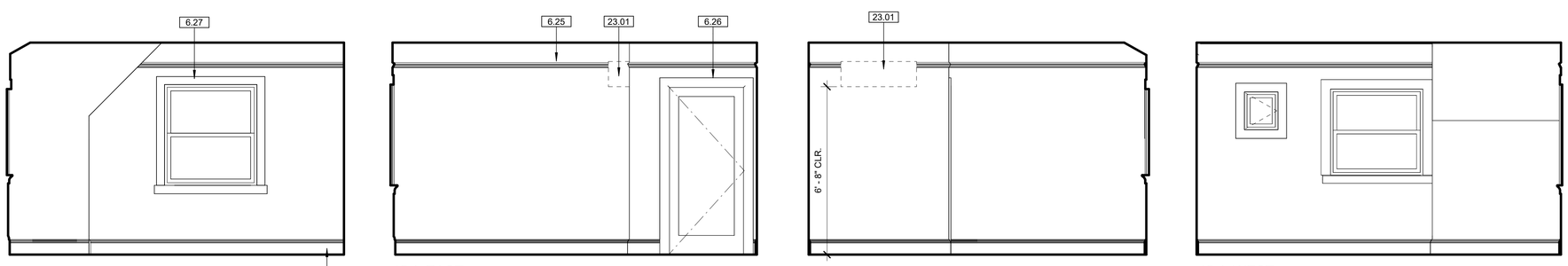

1A | NORTH

1B | EAST

1C | SOUTH

1D | WEST

1 INTERIOR ELEVATIONS - PRIVATE OFFICE 203
3/8" = 1-0"

CLIENT

ALAMEDA COUNTY

NOTE: If this drawing is not 22"x34" it has been revised from its original size and the scales noted on drawing/details are no longer applicable.
© 2022 Shah Kawasaki Architects

Revision Number	DATE	ISSUE DESCRIPTION
	09/03/2026	PERMIT SET

Project

WHITECOTTON COTTAGE REHABILITATION

15400 FOOTHILL BLVD
SAN LEANDRO, CA 94578

Architect of Record

P&T

Consultant

PAGE & TURNBULL
170 MAIDEN LANE, 5TH FLOOR
SAN FRANCISCO, CA

LICENSED ARCHITECT
PETER BIRDSALL
C23018
EX.4/30/2027
STATE OF CALIFORNIA

Drawing Title
INTERIOR ELEVATIONS

Drawing No.
A4.14

SKA Project Number: 25001

GENERAL NOTES:

1. SEE ROOM FINISH SHEDULE ON SHEET A6.41.
2. SEE DOOR SCHEDULE ON SHEET A6.11 AND A6.12
3. SEE WINDOW SCHEDULE ON SHEET A6.21

KEYNOTE LEGEND

KEY VALUE	KEYNOTE TEXT
6.24	(E) BASEBOARD TO BE SALVAGED AND REINSTALLED, TYP.
6.25	(E) PICTURE RAIL TO BE SALVAGED AND REINSTALLED, TYP.
6.26	(E) DOOR FRAME TO BE SALVAGED AND REINSTALLED, TYP.
6.27	(E) WINDOW FRAME TO BE SALVAGED AND REINSTALLED, TYP.
6.28	PAINTED WOOD HANDRAIL, PROVIDE BLOCKING AT SUPPORT LOCATIONS, TYP.
10.04	SEMI-RECESSED FIRE EXTINGUISHER CABINET
23.01	INTERIOR FAN COIL UNIT; S.M.D., TYP.

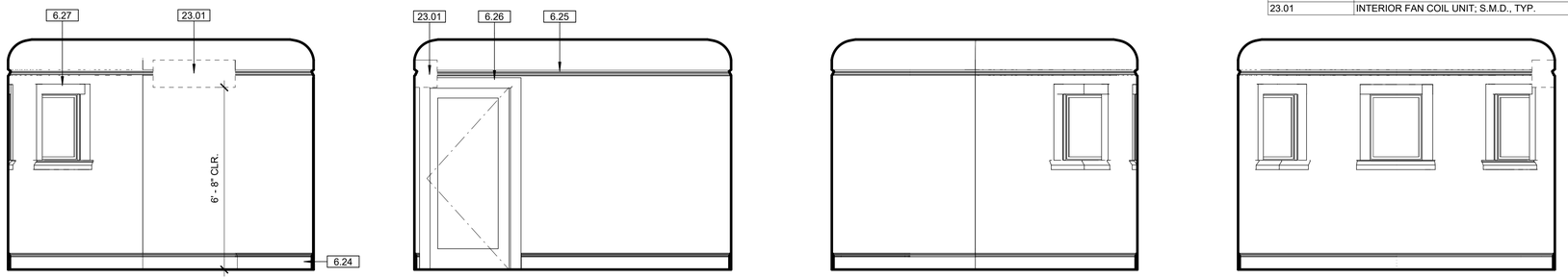

2A | NORTH

2B | EAST

2C | SOUTH

2D | WEST

2 INTERIOR ELEVATIONS - MEETING ROOM
3/8" = 1-0"

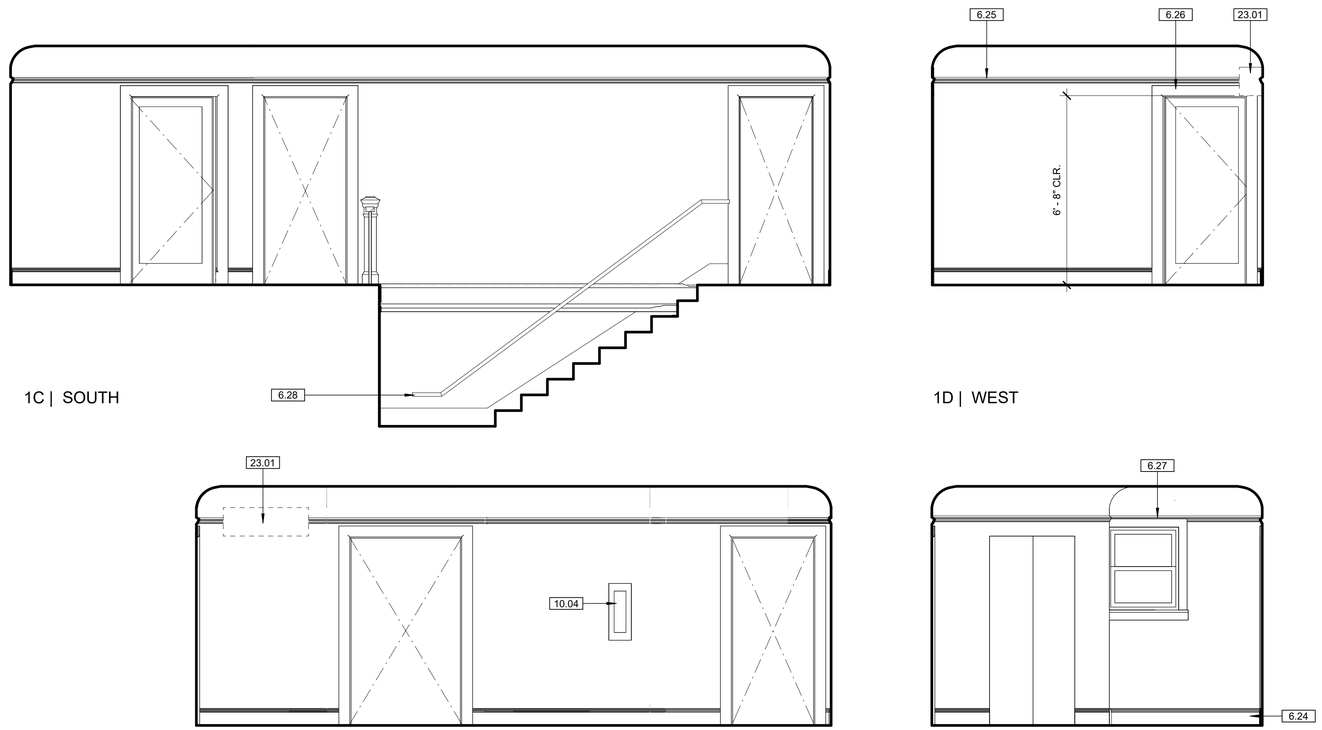

1C | SOUTH

1D | WEST

1A | NORTH

1B | EAST

1 INTERIOR ELEVATIONS - STAIR HALL
3/8" = 1-0"

CLIENT

ALAMEDA COUNTY

NOTE: If this drawing is not 22"x34" it has been revised from its original size and the scales noted on drawing/details are no longer applicable.

© 2022 Shah Kawasaki Architects

Revision Number	DATE	ISSUE DESCRIPTION
	09/03/2026	PERMIT SET

Project

WHITECOTTON COTTAGE REHABILITATION

15400 FOOTHILL BLVD
SAN LEANDRO, CA 94578

Architect of Record

P&T

Consultant

PAGE & TURNBULL
170 MAIDEN LANE, 5TH FLOOR
SAN FRANCISCO, CA

LICENSED ARCHITECT
JAYNER BITNER-GLUNDT
C23018
EX.4/30/2027
STATE OF CALIFORNIA

Drawing Title

INTERIOR ELEVATIONS

Drawing No.

A4.15

SKA Project Number: 25001

GENERAL NOTES:

1. SEE ROOM FINISH SHEDULE ON SHEET A6.41.
2. SEE DOOR SCHEDULE ON SHEET A6.11 AND A6.12
3. SEE WINDOW SCHEDULE ON SHEET A6.21

KEYNOTE LEGEND

KEY VALUE	KEYNOTE TEXT
6.24	(E) BASEBOARD TO BE SALVAGED AND REINSTALLED, TYP.
6.26	(E) DOOR FRAME TO BE SALVAGED AND REINSTALLED, TYP.
6.27	(E) WINDOW FRAME TO BE SALVAGED AND REINSTALLED, TYP.
23.01	INTERIOR FAN COIL UNIT; S.M.D., TYP.

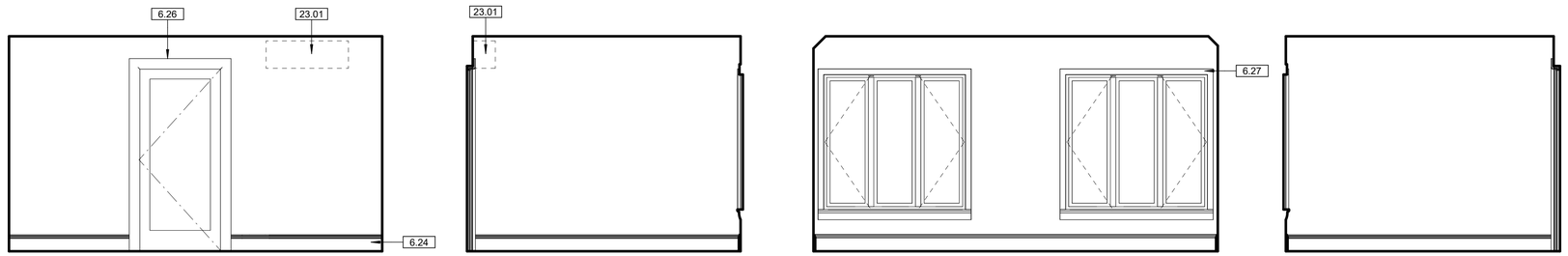

2A | NORTH

2B | EAST

2C | SOUTH

2D | WEST

2 INTERIOR ELEVATIONS - PERSONAL OFFICE 208
3/8" = 1-0"

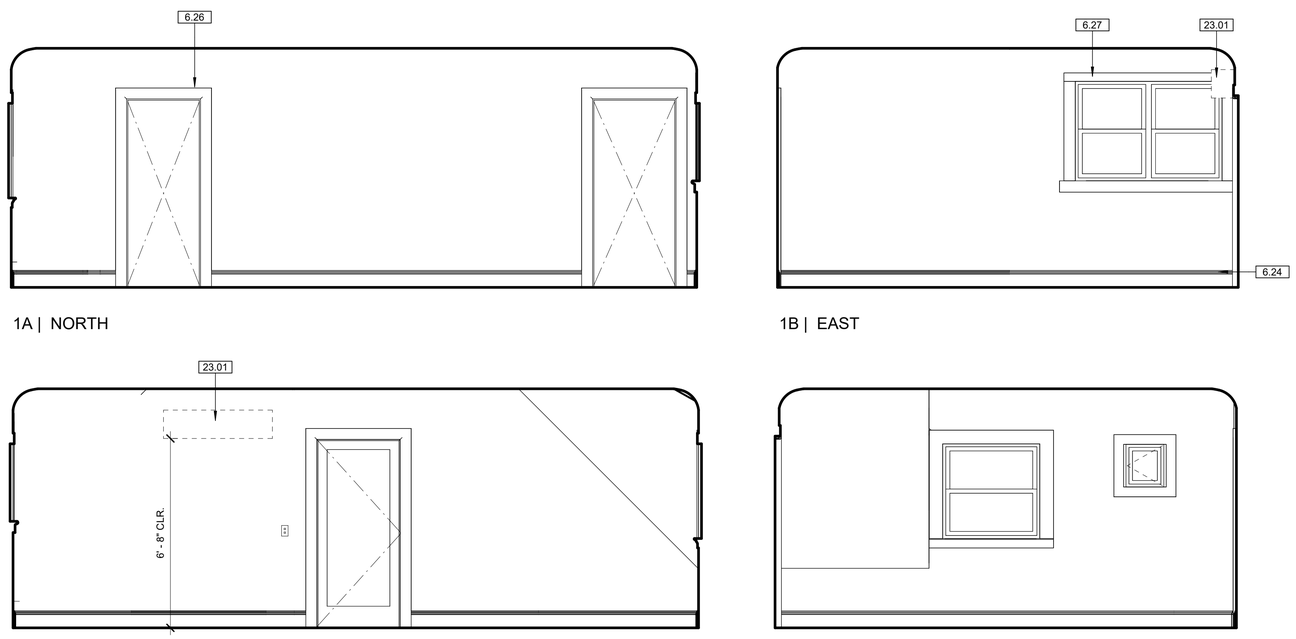

1A | NORTH

1B | EAST

1C | SOUTH

1D | WEST

1 INTERIOR ELEVATIONS - OPEN OFFICE 207
3/8" = 1-0"

CLIENT

ALAMEDA COUNTY

NOTE: If this drawing is not 22"x34" it has been revised from its original size and the scales noted on drawing/details are no longer applicable.

© 2022 Shah Kawasaki Architects

Revision Number	DATE	ISSUE DESCRIPTION
	09/03/2026	PERMIT SET

Project

WHITECOTTON COTTAGE REHABILITATION

15400 FOOTHILL BLVD
SAN LEANDRO, CA 94578

Architect of Record

Consultant

PAGE & TURNBULL
170 MAIDEN LANE, 5TH FLOOR
SAN FRANCISCO, CA

LICENSED ARCHITECT
PETER BIRKHOLZ
C23016
EX.4/30/2027
STATE OF CALIFORNIA

Drawing Title

INTERIOR ELEVATIONS

Drawing No.

A4.16

SKA Project Number: 25001

PRIMARY STAIR CODE ANALYSIS

ELEMENT	2025 CBC		EXISTING NON-CONFORMING CONDITION	2025 CHBC CODE ALTERNATIVE		REQUEST TO B.I.D.	PRE-APPROVED
GUARDRAILS	CBC 1015.3 Height	Required guards shall be not less than 42 inches high.	Existing historic railing is 33 inches high.	CHBC 8-504	"The height of railings and guards and the spacing of balusters may continue in the historical height and spacing unless a distinct hazard has been identified or created by a change in use or occupancy."	Please confirm that the project can apply the CHBC exception for the existing non-conforming railing at the historic stair.	Yes - see G0.41
HANDRAILS	CBC 1014.2 Height	Handrail height shall be not less than 34 inches.	Existing historic railing is 33 inches high.	CHBC 8-502.3 Stairs	"Handrails with nonconforming grip size or extensions are allowed if determined by the enforcing agency to not constitute a distinct hazard."	Please confirm that the project can apply the CHBC exception for the existing non-conforming historic railing, at one side of the stair.	
	CBC 1014.5 Continuity	Handrail gripping surfaces shall be continuous, without interruption by newel posts or other obstructions.	Existing historic railing has newel posts at landings.				
HEADROOM	CBC 1011.3 Headroom	Stairways shall have a headroom clearance of not less than 80 inches	Existing headroom clearance at the historic stair is 78 inches at one landing.	CHBC 8-502.2	"Existing door openings and corridor widths of less than dimensions required by regular code shall be permitted where there is sufficient width and height for the occupants to pass through the opening or traverse the exit."	Please confirm that the non-conforming headroom clearance at the existing landing of the historic stair is acceptable with warning signage.	Yes - see G.041
RISERS & TREADS	Section 1011.5.2 Riser Height and Tread Depth	Stair riser heights shall be 7 inches maximum. Rectangular tread depths shall be 11 inches. minimum.	Existing historic risers measure approximately 7-3/8 inches high. Existing historic treads measure approximately 10 inches deep.	CHBC 502.3 Stairs	"Existing stairs having risers and treads or width at variance with the regular code are allowed if determined by the enforcing agency to not constitute a distinct hazard."	Please confirm that the project can apply the CHBC exception for the existing non-conforming risers and treads at the historic stair.	

KEYNOTE LEGEND

KEY VALUE	KEYNOTE TEXT
6.16	(E) HISTORIC WOOD RAILING TO REMAIN. STRIP ALL ELEMENTS OF ASSEMBLY OF PAINT AND REPAINT. REPLACE DAMAGED OR MISSING SPINDLES IN KIND, TYP. ASSUME 15 SPINDLES REQUIRE REPLACEMENT.
6.17	SALVAGE & REINSTALL (E) STAIR ASSEMBLY TO ACCOMMODATE NEW FLOOR SHEATHING AT LEVELS 1 AND 2
6.18	WOOD HANDRAIL, SEE DETAILS A0.03
6.19	REPAIR AND REFINISH (E) WOOD TREADS TO REMAIN.
9.02	CONTRAST STRIPE AT TOP AND BOTTOM RISER EACH RUN

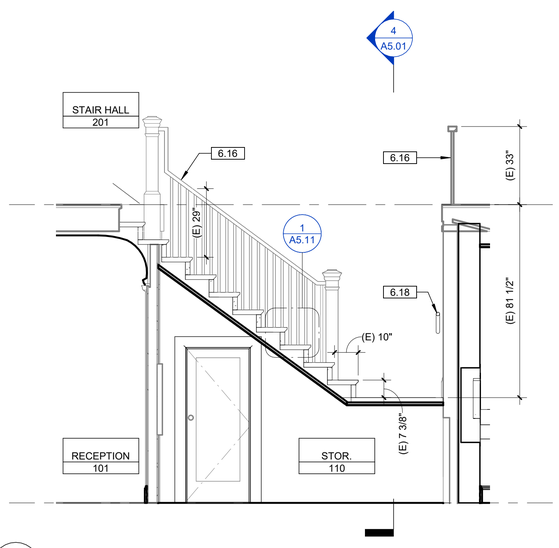

5 ENLARGED SECTION C - PRIMARY STAIR
3/8" = 1'-0"

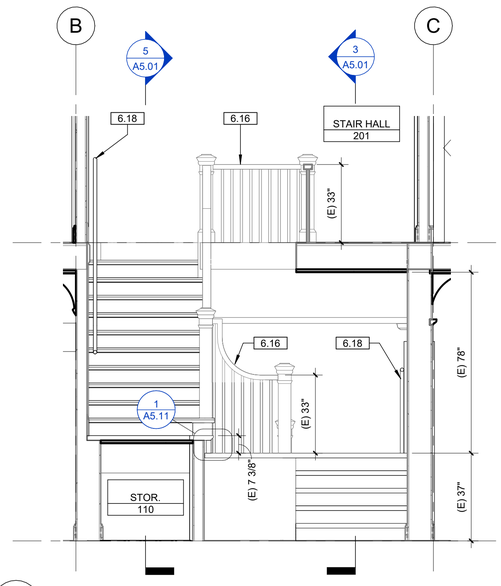

4 ENLARGED SECTION B - PRIMARY STAIR
3/8" = 1'-0"

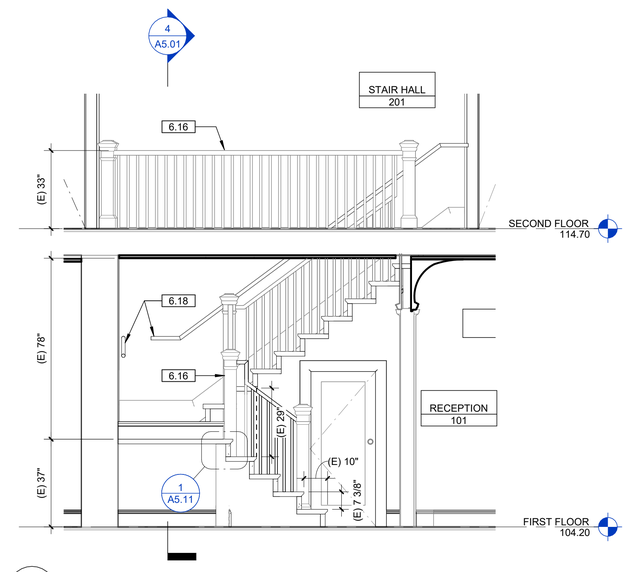

3 ENLARGED SECTION A - PRIMARY STAIR
3/8" = 1'-0"

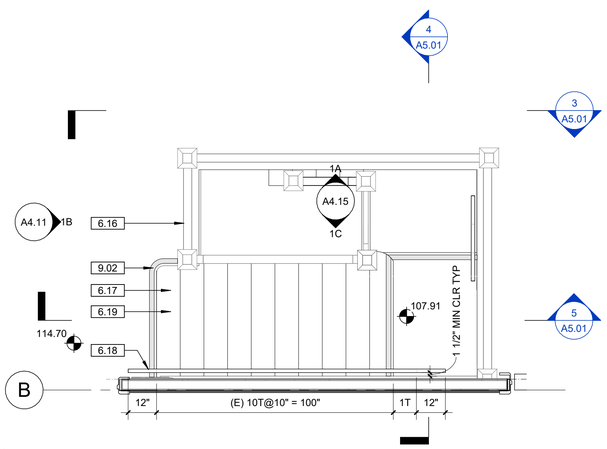

2 ENLARGED FLOOR PLAN - PRIMARY STAIR - SECOND FLOOR
3/8" = 1'-0"

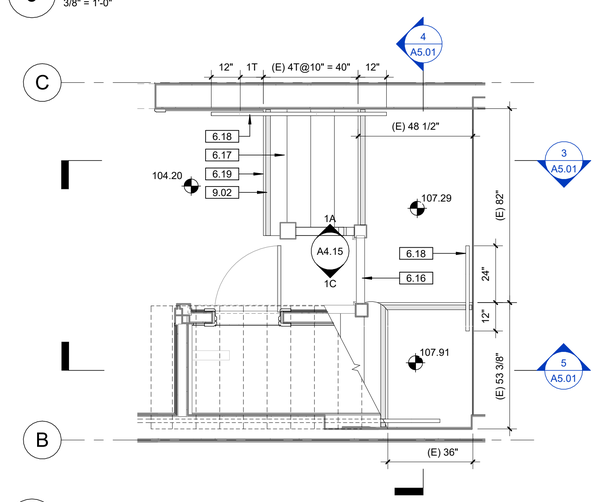

1 ENLARGED FLOOR PLAN - PRIMARY STAIR - FIRST FLOOR
3/8" = 1'-0"

CLIENT

GENERAL SERVICES AGENCY COUNTY OF ALAMEDA GSA

ALAMEDA COUNTY

NOTE: If this drawing is not 22"x34" it has been revised from its original size and the scales noted on drawing/details are no longer applicable.

© 2022 Shah Kawasaki Architects

Revision Number	DATE	ISSUE DESCRIPTION
	09/03/2026	PERMIT SET

Project

WHITECOTTON COTTAGE REHABILITATION

15400 FOOTHILL BLVD
SAN LEANDRO, CA 94578

Architect of Record

P&T

Consultant

PAGE & TURNBULL
170 MAIDEN LANE, 5TH FLOOR
SAN FRANCISCO, CA

LICENSED ARCHITECT PETER BIRDINO C23018 EX.4/30/2027 STATE OF CALIFORNIA

Drawing Title

ENLARGED PLANS & SECTIONS - PRIMARY STAIR

Drawing No.

A5.01

SKA Project Number: 25001

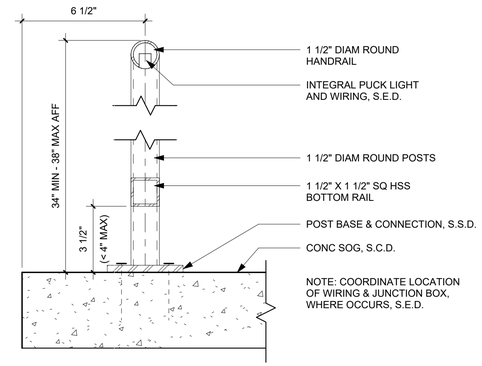

3 EXT. STAIR AND RAMP - TYP HANDRAIL SECTION AT CONCRETE
3" = 1'-0"

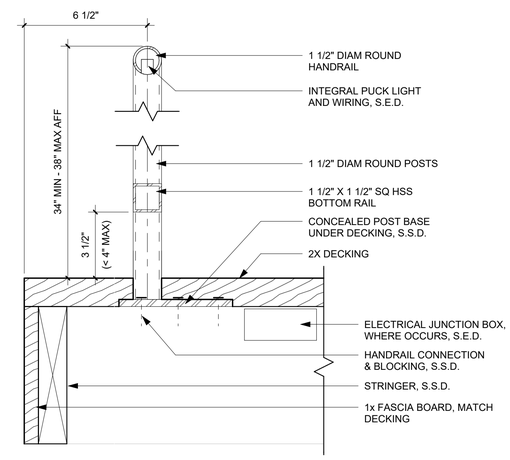

2 EXT. STAIR AND RAMP - TYP HANDRAIL SECTION AT DECKING
3" = 1'-0"

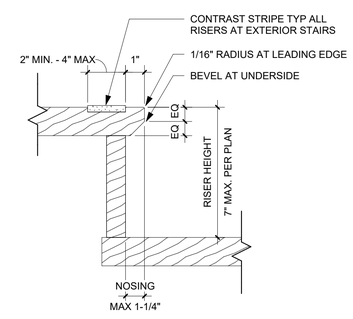

1 TYP WOOD STAIR NOSING DETAIL
3" = 1'-0"

CLIENT

ALAMEDA COUNTY

NOTE: If this drawing is not 22"x34" it has been revised from its original size and the scales noted on drawing/details are no longer applicable.

© 2022 Shah Kawasaki Architects

Revision Number	DATE	ISSUE DESCRIPTION
	09/03/2026	PERMIT SET

Project

WHITECOTTON COTTAGE REHABILITATION

15400 FOOTHILL BLVD
SAN LEANDRO, CA 94578

Architect of Record

P&T

Consultant

PAGE & TURNBULL
170 MAIDEN LANE, 5TH FLOOR
SAN FRANCISCO, CA

LICENSED ARCHITECT
PETER BIRKINBINE
C23108
EX.4/30/2027
STATE OF CALIFORNIA

Drawing Title

DETAILS - STAIRS

Drawing No.

A5.11

SKA Project Number: 25001

KEYNOTE LEGEND	
KEY VALUE	KEYNOTE TEXT
3.06	CONC SLAB AT ELEVATOR PIT, SLOPE TO DRAIN, S.S.D.
10.11	ELEVATOR SIGNAGE, SEE A0.04
14.01	GARAVENTA LULA ELECTRIC ELEVATOR.
14.03	CONFIRM REQUIRED ELEVATOR OVERRUN PER MFR
22.06	DRAIN AT ELEVATOR PIT, S.P.D.

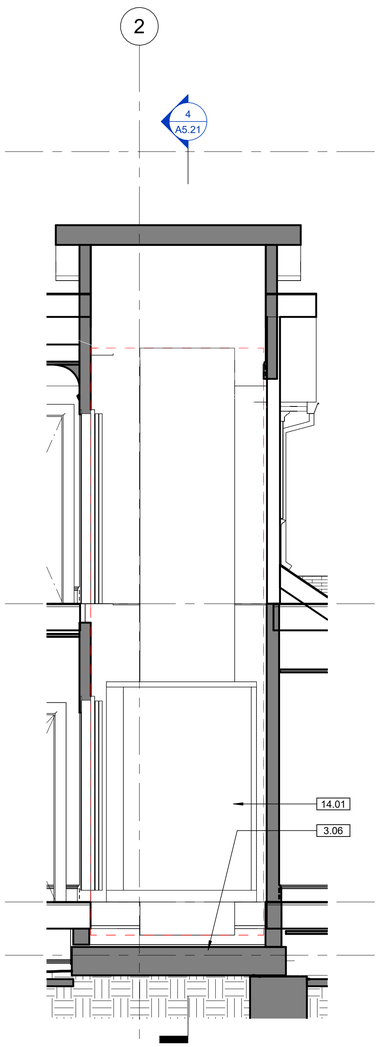

5 ELEVATOR - SECTION B
3/8" = 1'-0"

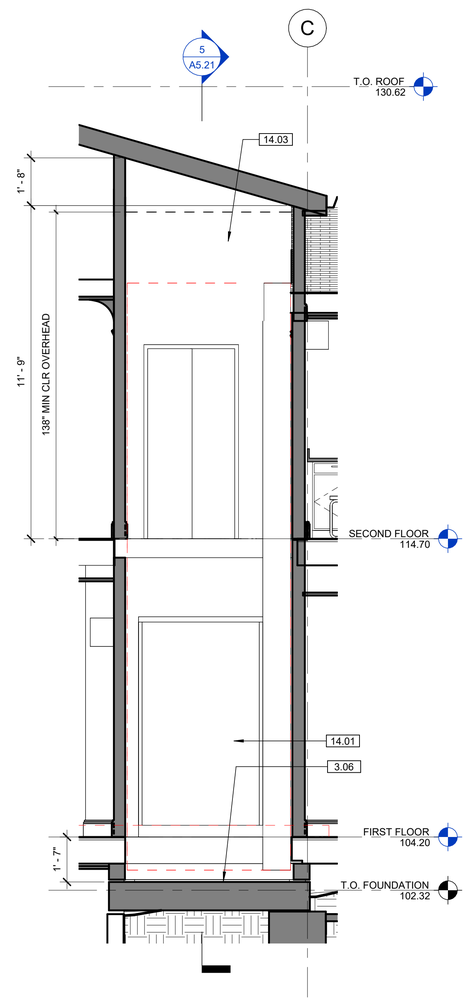

4 ELEVATOR - SECTION A
3/8" = 1'-0"

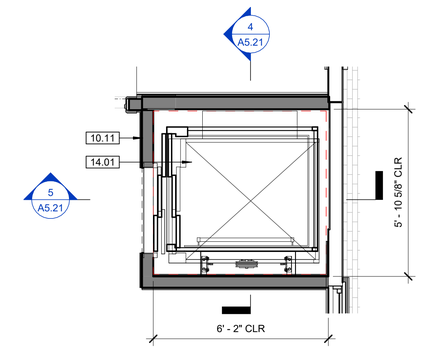

3 ENL. FLOOR PLAN - ELEVATOR - SECOND FLOOR
3/8" = 1'-0"

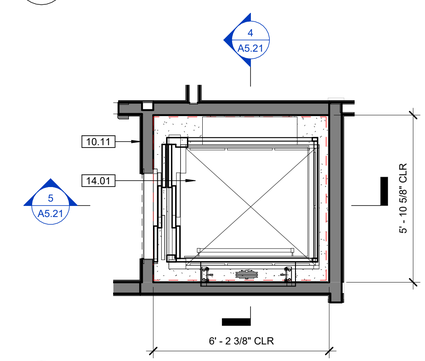

2 ENL. FLOOR PLAN - ELEVATOR - FIRST FLOOR
3/8" = 1'-0"

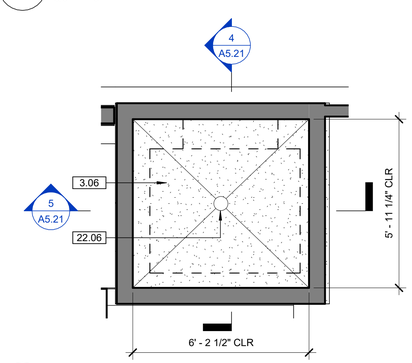

1 ENL. FLOOR PLAN - ELEVATOR - PIT
3/8" = 1'-0"

CLIENT

GENERAL SERVICES AGENCY
GSA
COUNTY OF ALAMEDA

ALAMEDA COUNTY

NOTE: If this drawing is not 22"x34" it has been revised from its original size and the scales noted on drawing/details are no longer applicable.

© 2022 Shah Kawasaki Architects

Revision Number	DATE	ISSUE DESCRIPTION
	09/03/2026	PERMIT SET

Project

WHITECOTTON COTTAGE REHABILITATION

15400 FOOTHILL BLVD
SAN LEANDRO, CA 94578

Architect of Record

P&T

Consultant

PAGE & TURNBULL
170 MAIDEN LANE, 5TH FLOOR
SAN FRANCISCO, CA

LICENSED ARCHITECT
PETER BITRAKOV
C23018
EX.4/30/2027
STATE OF CALIFORNIA

Drawing Title

ENLARGED PLANS & SECTIONS - ELEVATOR

Drawing No.

A5.21

SKA Project Number: 25001

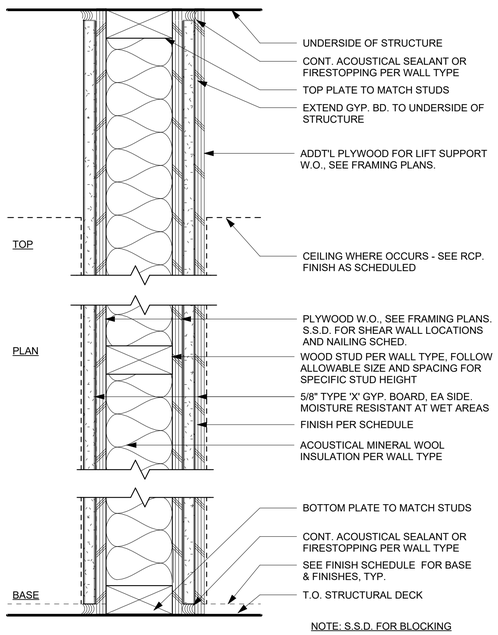

NOTES:

1. ONE LAYER 5/8" TYPE X GYPSUM WALLBOARD OR GYPSUM VENEER BASE APPLIED PARALLEL OR AT RIGHT ANGLES TO EACH SIDE OF 2 × 4 WOOD STUDS 24 " O.C. WITH 6D COATED NAILS, 1-7/8" LONG, 0.0915" SHANK, 1/4" HEADS, 7" O.C.
2. JOINTS STAGGERED 24" ON OPPOSITE SIDES.
3. SEE 1 / A8.11 AND 4 / A8.11 FOR TYP. PENETRATIONS

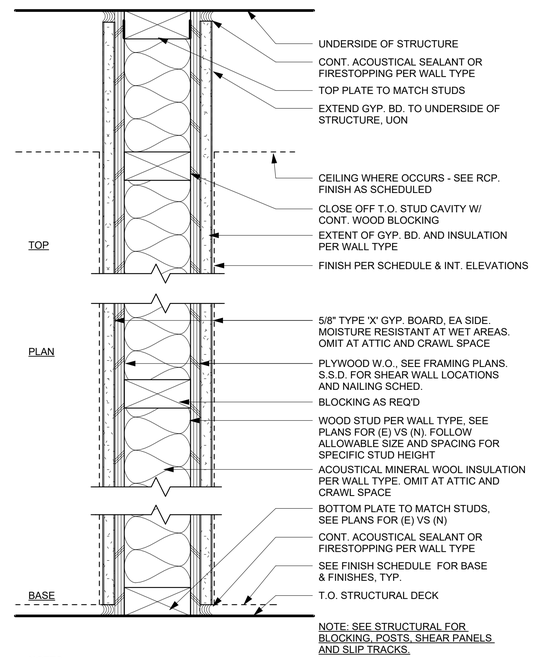

NOTES:

1. ONE LAYER 5/8" TYPE X GYPSUM WALLBOARD OR GYPSUM VENEER BASE APPLIED PARALLEL OR AT RIGHT ANGLES TO EACH SIDE OF 2 X 4 WOOD STUDS 24" O.C. WITH 6D COATED NAILS, 17/8" LONG, 0.0915" SHANK, 1/4" HEADS, 7" O.C.
2. JOINTS STAGGERED 24" ON OPPOSITE SIDES. (LOAD-BEARING)
3. SEE 2 / A8.11 AND 5 / A8.11 FOR TYP. PENETRATIONS

B — **SINGLE STUD WALL. 1 LAYER GYP BD EA SIDE, 1-HR RATED, NO STC** — GENERIC

LISTING: UL DESIGN U309, GA WP 3510

WALL TYPE	STUD SIZE	OVERALL THK	FIRE RATING	WALLBD EXTENT	ACOUSTIC INSUL	COMMENTS
wB41FZ	2X4	4-3/4"	1-HR	FULL	YES	
wB61FZ	2X6	6-3/4"	1-HR	FULL	YES	

A — **SINGLE STUD PARTITION, 1 LAYER GYP BD EA SIDE, UNRATED** — GENERIC

LISTING: GA WP 3510 — STC 35

WALL TYPE	STUD SIZE	OVERALL THK	FIRE RATING	WALLBD EXTENT	ACOUSTIC INSUL	COMMENTS
wA4NPX	2x4	4-3/4	NR	PARTIAL	NO	
wA4NFZ	2x4	4-3/4	NR	FULL	YES	
wA6NFZ	2x6	6-3/4	NR	FULL	YES	
wA6NFX	2x6	6-3/4	NR	PARTIAL	NO	
wA10NFZ	2x10	10-1/2"	NR	FULL	YES	

WALL LEGEND - WOOD STUD INTERIOR PARTITIONS

WOOD STUD PARTITION TYPE NOMENCLATURE

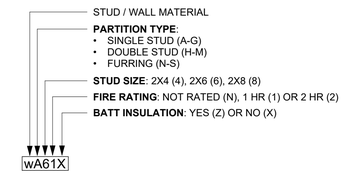

PARTITION SCHEDULE NOTES

1. FOR NON-LOAD-BEARING WOOD STUDS:
   A. SEE STRUCTURAL DRAWINGS FOR FRAMING, DIMENSIONS, SPACING, DETAILS, AND SCHEDULES.
   B. SEE STRUCTURAL DRAWINGS FOR SHEAR WALL LOCATIONS AND REQUIREMENTS.
   C. IN LOCATIONS WHERE WALLS PROVIDE LATERAL SUPPORT FOR WALL-HUNG SHELVES, LOCKERS, EQUIPMENT, ETC. USE MIN. 2x4 STUDS AT 16" O.C. MAXIMUM. ASSUME A LATERAL LOAD OF 10 PSF, AND A DEFLECTION OF L/360.
2. FOR SHAFT WALL STUDS:
   A. USE SHAFT WALL STUD SIZES TO MEET THE REQUIRED MEMBER DEPTH AND DEFLECTION CRITERIA BASED ON THE USG MANUFACTURER'S SHAFT WALL SYSTEM LIMITING WALL HEIGHT TABLES.
   B. FOR TYPICAL INSTALLATION OF SHAFT WALLS ASSUME A LATERAL LOAD OF 5 PSF AND A DEFLECTION OF L/240.
3. THE TERMS GYP BD AND TYPE "X" GYP BD REFER TO FIRE-RESISTANT GYPSUM BOARD, ABUSE-RESISTANT GYPSUM BOARD, IMPACT-RESISTANT BOARD, COATED GLASS MAT WATER-RESISTANT GYPSUM BACKER BOARD, OR GYPSUM BACKING BOARD. INSTALL IN ACCORDANCE WITH RECOMMENDATIONS OF GA-216.
4. INSTALL ABUSE- AND IMPACT-RESISTANT GYP BD AT STAIRS AND CORRIDORS. SEE PTN TYPES FOR REQUIREMENTS AT OTHER LOCATIONS.

CLIENT

ALAMEDA COUNTY

NOTE: If this drawing is not 22"x34" it has been revised from its original size and the scales noted on drawing/details are no longer applicable.

© 2022 Shah Kawasaki Architects

Revision Number	DATE	ISSUE DESCRIPTION
	09/03/2026	PERMIT SET

Project

WHITECOTTON COTTAGE REHABILITATION

15400 FOOTHILL BLVD
SAN LEANDRO, CA 94578

Architect of Record

P&T

Consultant

PAGE & TURNBULL
170 MAIDEN LANE, 5TH FLOOR
SAN FRANCISCO, CA

LICENSED ARCHITECT — PETER BIRABREN — C23028 — EX.4/30/2027 — STATE OF CALIFORNIA

Drawing Title

PARTITION TYPES - INTERIOR

Drawing No.

A6.01

SKA Project Number: 25001

DOOR REPAIR SCHEDULE

DOOR DESCRIPTION		DIMENSIONS			DOOR					FRAME			
No.	TYPE	WIDTH	HEIGHT	THK	MATERIAL	FINISH EXT/INT	GLAZING	CATEGORY	HDWR	MATERIAL	FINISH EXT/INT	FIRE RATING	NOTES
*101B	A	2' - 4"	5' - 6"	0' - 1 1/2"	WOOD	PTD	N/A	3	E	WD	PTD	NR	
*106A	H	2' - 8"	6' - 8"	0' - 1 1/2"	WOOD	PTD	OBS. LAM.	3A	R	WD	PTD	NR	FIXED IN PLACE. PROVIDE INT. FURRED WALL ASSEMBLY AND FLASHING AT SILL
*108D	B	2' - 4"	6' - 8"	0' - 1 1/2"	WOOD	PTD	CLR. LAM.	3A	R	WD	PTD	NR	FIXED IN PLACE
*108E	B	2' - 4"	6' - 8"	0' - 1 1/2"	WOOD	PTD	CLR. LAM.	3A	R	WD	PTD	NR	FIXED IN PLACE
*108F	B	2' - 4"	6' - 8"	0' - 1 1/2"	WOOD	PTD	CLR. LAM.	3A	R	WD	PTD	NR	FIXED IN PLACE
*108G	B	2' - 4"	6' - 8"	0' - 1 1/2"	WOOD	PTD	CLR. LAM.	3A	R	WD	PTD	NR	FIXED IN PLACE
*108H	B	2' - 4"	6' - 8"	0' - 1 1/2"	WOOD	PTD	CLR. LAM.	3A	R	WD	PTD	NR	FIXED IN PLACE
*108J	B	2' - 4"	6' - 8"	0' - 1 1/2"	WOOD	PTD	CLR. LAM.	3A	R	WD	PTD	NR	FIXED IN PLACE
*109B	B	2' - 4"	6' - 8"	0' - 1 1/2"	WOOD	PTD	CLR. LAM.	3A	R	WD	PTD	NR	FIXED IN PLACE
*109C	B	2' - 4"	6' - 8"	0' - 1 1/2"	WOOD	PTD	CLR. LAM.	3A	R	WD	PTD	NR	FIXED IN PLACE
*109D	B	2' - 4"	6' - 8"	0' - 1 1/2"	WOOD	PTD	CLR. LAM.	3A	R	WD	PTD	NR	FIXED IN PLACE
*109E	B	2' - 4"	6' - 8"	0' - 1 1/2"	WOOD	PTD	CLR. LAM.	3A	R	WD	PTD	NR	FIXED IN PLACE
*109F	B	2' - 4"	6' - 8"	0' - 1 1/2"	WOOD	PTD	CLR. LAM.	3A	R	WD	PTD	NR	FIXED IN PLACE
*109G	B	2' - 4"	6' - 8"	0' - 1 1/2"	WOOD	PTD	CLR. LAM.	3A	R	WD	PTD	NR	FIXED IN PLACE

Grand total: 14

NEW DOOR SCHEDULE

DOOR DESCRIPTION		DIMENSIONS			DOOR			FRAME			
No.	TYPE	WIDTH	HEIGHT	THK	MATERIAL	FINISH EXT/INT	GLAZING	MATERIAL	FINISH EXT/INT	FIRE RATING	NOTES
001A	G	2' - 6"	6' - 8"	0' - 1 1/2"	MTL	PTD	N/A	MTL	PTD	NR	EXT. DOOR
101A	C	3' - 0"	6' - 8"	0' - 1 1/2"	WOOD	PTD	N/A	WD	PTD	NR	EXT. DOOR
103A	A	3' - 0"	6' - 8"	0' - 1 1/2"	WOOD	PTD	N/A	WD	PTD	NR	UNDERCUT DOOR 3/4"
104A	E	4' - 0"	6' - 8"	0' - 1 1/2"	WOOD	PTD	N/A	WD	PTD	NR	UNDERCUT DOOR 3/4"
105A	A	3' - 0"	6' - 8"	0' - 1 1/2"	WOOD	PTD	N/A	WD	PTD	NR	UNDERCUT DOOR 3/4"
106B	A	3' - 0"	6' - 8"	0' - 1 1/2"	WOOD	PTD	N/A	WD	PTD	NR	UNDERCUT DOOR 3/4"
107A	A	3' - 0"	6' - 8"	0' - 1 1/2"	WOOD	PTD	N/A	WD	PTD	NR	UNDERCUT DOOR 3/4"
108A	F	3' - 0"	6' - 8"	0' - 1 1/2"	WOOD	PTD	CLR. LAM.	WD	PTD	NR	EXT. DOOR
108B	A	3' - 0"	6' - 8"	0' - 1 1/2"	WOOD	PTD	N/A	WD	PTD	NR	UNDERCUT DOOR 3/4"
108C	D	6' - 0"	6' - 8"	0' - 0 1/4"	WOOD	PREFINISHED	N/A	WD	PTD	NR	ACCORDION PARTITION, SEE SPEC.
109A	A	3' - 0"	6' - 8"	0' - 1 1/2"	WOOD	PTD	N/A	WD	PTD	NR	UNDERCUT DOOR 3/4"
109H	D	6' - 0"	6' - 8"	0' - 0 1/4"	WOOD	PREFINISHED	N/A	WD	PTD	NR	ACCORDION PARTITION, SEE SPEC.
202A	A	3' - 0"	6' - 8"	0' - 1 1/2"	WOOD	PTD	N/A	WD	PTD	NR	UNDERCUT DOOR 3/4"
203A	A	3' - 0"	6' - 8"	0' - 1 1/2"	WOOD	PTD	N/A	WD	PTD	NR	UNDERCUT DOOR 3/4"
204A	A	3' - 0"	6' - 8"	0' - 1 1/2"	WOOD	PTD	N/A	WD	PTD	NR	UNDERCUT DOOR 3/4"
205A	A	3' - 0"	6' - 8"	0' - 1 1/2"	WOOD	PTD	N/A	WD	PTD	NR	UNDERCUT DOOR 3/4"
206A	A	3' - 0"	6' - 8"	0' - 1 1/2"	WOOD	PTD	N/A	WD	PTD	NR	UNDERCUT DOOR 3/4"
208A	A	3' - 0"	6' - 8"	0' - 1 1/2"	WOOD	PTD	N/A	WD	PTD	NR	UNDERCUT DOOR 3/4"

Grand total: 18

DOOR SCHEDULE NOTES

1. SEE A6.12 FOR SALVAGE DOOR SCHEDULE. ALL DOORS ON A6.12 TO BE REMOVED & PROTECTED, AND MADE AVAILABLE FOR INVENTORY BY A.O.R. IN EARLY CONSTRUCTION. SALVAGED DOORS ONCE INVENTORIED MAY BE CONSIDERED FOR REUSE, AND REPLACE SELECT INTERIOR DOORS IN THE NEW DOOR SCHEDULE ABOVE.
2. ENSURE PROPER WORKING ORDER AND WEATHERTIGHTNESS. PERFORM SURVEY OF ALL (E) DOOR OPENINGS. VERIFY QTY AND CONDITION OF FRAME, LEAF, GLAZING, FLASHING, AND HARDWARE. NOTIFY ARCHITECT WHEN DISCREPANCIES WITH THESE DOCUMENTS ARE FOUND.
3. DOOR DIMENSIONS ARE NOMINAL. FIELD VERIFY ALL (E) OPENINGS, AND (N) OPENINGS WHEN ALIGNING WITH (E). NOTIFY ARCHITECT WHEN DISCREPANCIES WITH THESE DOCUMENTS ARE FOUND.
4. SURVEY (E) HARDWARE AND VERIFY WORKING ORDER OF LOCKS, PULLS, HINGES, AND CLOSERS, WHERE THEY OCCUR. SALVAGE, CATALOGUE FOR REFURBISHMENT, AND REINSTALL HARDWARE IN ORIGINAL LOCATIONS, U.O.N. IN SCHEDULE.
5. REMOVE ALL NON-HISTORIC OR NON-FUNCTIONING FASTENERS, CONDUITS, AND ACCESSORIES, INCLUDING WINDOW TREATMENTS OVER GLAZED LEAFS, SIDELITES, OR TRANSOMS. PATCH DOOR ASSEMBLY SUBSTRATE(S) PRIOR TO APPLICATION OF FINISH, TYP.
6. PROTECT ALL (E) MATERIALS AND FINISHES TO REMAIN FROM DAMAGE DURING CONSTRUCTION. PROVIDE PROTECTION AS INDICATED AND NEEDED.
7. REPAIR DAMAGED INTERIOR TRIM TO MATCH EXISTING. REPLACE TO MATCH EXISTING WHERE MISSING OR DETERIORATED BEYOND REPAIR, TYP. PREPARE, PRIME, AND PAINT.
8. HARD-WIRED CARD READER LOCATIONS REQUIRE ELECTRICAL AND/OR SECURITY TO COORD., FURNISH & INSTALL COMPONENTS INCLUDING, BUT NOT LIMITED TO WIRE, CONDUIT, AND CONNECTIVITY FROM CLG. THROUGH FRAME TO ALL ELECTRIFIED HARDWARE. S.T.D.
9. AUTOMATIC OPERATOR LOCATIONS: HARD-WIRED, ELECTRICAL 120V LOCATIONS REQUIRED. ELECTRICAL AND/OR SECURITY TO COORD., FURNISH & INSTALL COMPONENTS INCLUDING, BUT NOT LIMITED TO WIRE, CONDUIT, AND CONNECTIVITY FROM CLG. THROUGH FRAME TO ALL ELECTRIFIED HARDWARE. S.T.D.

DOOR TYPES

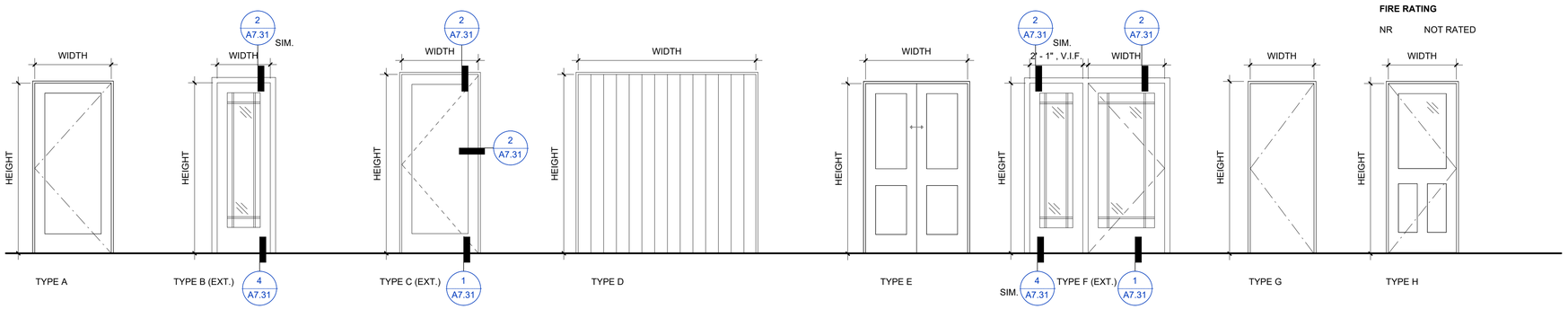

WOOD DOOR REPAIRS

REFER TO SPEC SECTIONS 080314 "HISTORIC TREATMENT OF WOOD DOORS" AND 090391 "HISTORIC TREATMENT OF PLAIN PAINTING."

PAINTED SURFACES CONTAIN LEAD. ALL WORK THAT WILL DISTURB PAINTED SURFACES SHALL BE COMPLETED IN ACCORDANCE WITH ALL APPLICABLE FEDERAL, STATE, AND LOCAL REGULATIONS AND COUNTY OF ALAMEDA SPECIFICATIONS INCLUDING DOCUMENT 13 10 20 LEAD HAZARD CONTROL SPECIFICATION.

CATEGORY 1: ROUTINE MAINTENANCE
1. REMOVE BROKEN GLAZING.
2. REMOVE ALL LOOSE AND UNSOUND LAYERS OF EXISTING PAINTS AND COATINGS.
3. PREPARE, PRIME, AND PAINT OR STAIN SURFACES.
4. INSTALL GLAZING, CLIPS, AND STOPS.
5. REPLACE MISSING OR BROKEN HARDWARE AS NOTED ON SCH.
6. REPLACE OR INSTALL WEATHERSTRIPPING ON EXTERIOR DOORS.
7. LEAD PAINT REMOVAL AT SALVAGED DOOR PANELS AND TRIM.

CATEGORY 2: REFINISHING
IN ADDITION TO THE WORK DESCRIBED IN CATEGORY 1, COMPLETE THE FOLLOWING:
1. REMOVE ALL STOPS AND GLAZING. SALVAGE, CATALOGUE, AND STORE GLAZING IF REUSING.
2. REMOVE AND SALVAGE ALL HARDWARE. CATALOGUE AND STORE FOR REINSTALLATION AS NOTED ON DOOR SCHEDULE.
3. REMOVE ALL CAULK AND SEALANTS.
4. REMOVE ALL LOOSE AND UNSOUND LAYERS OF EXISTING PAINTS AND COATINGS.
5. GLUE AND CLAMP LEAF JOINTS AS NEEDED.
6. PREPARE, PRIME, AND PAINT OR STAIN SURFACES.
7. INSTALL GLAZING, CLIPS, AND STOPS. REPLACE MISSING OR BROKEN STOPS AS NEEDED TO MATCH ORIGINAL.
8. INSTALL NEW OR REFURBISHED HDWR AS NOTED AND SPECIFIED.
9. REPLACE OR INSTALL WEATHERSTRIPPING ON EXTERIOR DOORS.

CATEGORY 3: STABILIZATION
IN ADDITION TO THE WORK DESCRIBED IN CATEGORY 2, COMPLETE THE FOLLOWING:
1. REMOVE ALL WEATHERED, GRAY, OR RED-BROWN SPOTS, OR OTHERWISE UNSOUND WOOD.
2. REMOVE DETERIORATED WOOD COMPLETELY. WIDEN ALL CHECKS TO EXPOSE SOUND CLEAN WOOD FOR REPAIR.
3. APPLY BORATE PRESERVATIVE AND CLEAR WATER REPELLANT WOOD PRESERVATIVE TO ALL BARE WOOD.
4. PATCH WITH REPAIR COMPOUND AND/OR WOOD DUTCHMAN TO AREAS GREATER THAN 1/4 INCH DEEP OR WIDE.

CATEGORY 3A: FIX IN PLACE
IN ADDITION TO THE WORK DESCRIBED IN CATEGORIES 2 AND 3, COMPLETE THE FOLLOWING:
1. REMOVE ALL (E) DOOR HARDWARE AND PATCH HOLES.
2. FIX DOOR IN PLACE.

CATEGORY 4: COMPONENT REPLACEMENT
IN ADDITION TO THE WORK DESCRIBED IN CATEGORIES 2 & 3, COMPLETE THE FOLLOWING:
1. WHERE WOOD MATERIAL EXHIBITS DETERIORATION AT MORE THAN 20% BUT LESS THAN 50% OF THE SURFACE AREA, COMPLETE DUTCHMAN REPAIR SPLICED INTO SOUND ORIGINAL WOOD.
2. FOR DOOR COMPONENTS WITH MORE THAN 50% DETERIORATION, REPLACE COMPONENT IN-KIND USING CARPENTRY METHODS EXHIBITED IN THE ORIGINAL WOOD WORK.

SAFETY GLAZING NOTES - DOORS

SAFETY GLAZING (NEW DOORS ONLY, U.O.N.) AT:
- LITES IN FIXED AND OPERABLE PANELS LARGER THAN 3" (2406.4.1)
- SIDELITES (2406.4.2)

SCHEDULE ABBREVIATIONS

GLAZING TYPE KEY - ALL NEW GLAZING

CLR CLEAR
OBS OVSCURE
LAM LAMINATED GLASS

HARDWARE KEY

(E) EXISTING TO REMAIN
(R) REPLACE HDWR. INCLUDING COUNTERWEIGHT SYSTEM

FIRE RATING

NR NOT RATED

CLIENT

GENERAL SERVICES AGENCY GSA COUNTY OF ALAMEDA

ALAMEDA COUNTY

NOTE: If this drawing is not 22"x34" it has been revised from its original size and the scales noted on drawing/details are no longer applicable.

© 2022 Shah Kawasaki Architects

Revision Number	DATE	ISSUE DESCRIPTION
	09/03/2026	PERMIT SET

Project

WHITECOTTON COTTAGE REHABILITATION
15400 FOOTHILL BLVD
SAN LEANDRO, CA 94578

Architect of Record

P&T

Consultant

PAGE & TURNBULL
170 MAIDEN LANE, 5TH FLOOR
SAN FRANCISCO, CA

LICENSED ARCHITECT PETER BIRMINGHAM C23018 EX.4/30/2027 STATE OF CALIFORNIA

Drawing Title
DOOR SCHEDULES & TYPES

Drawing No.
A6.11

SKA Project Number: 25001

SALVAGE DOOR SCHEDULE

DOOR DESCRIPTION			DIMENSIONS			DOOR			FRAME			
No.	TYPE	SCOPE	WIDTH	HEIGHT	THK	MATERIAL	FINISH EXT/INT	GLAZING	MATERIAL	FINISH EXT/INT	FIRE RATING	NOTES
*101B	A	SALVAGE, REPAIR & REINSTALL	2' - 4"	5' - 6"	0' - 1 1/2"	WOOD	PTD	N/A	WD	PTD	NR	
*106A	H	SALVAGE, REPAIR & REINSTALL	2' - 8"	6' - 8"	0' - 1 1/2"	WOOD	PTD	OBS. LAM.	WD	PTD	NR	FIXED IN PLACE
*106A	H	SALVAGE, REPAIR & REINSTALL	2' - 8"	6' - 8"	0' - 1 1/2"	WOOD	PTD	OBS. LAM.	WD	PTD	NR	FIXED IN PLACE. PROVIDE INT. FURRED WALL ASSEMBLY AND FLASHING AT SILL
*108D	B	SALVAGE, REPAIR & REINSTALL	2' - 4"	6' - 8"	0' - 1 1/2"	WOOD	PTD	CLR. LAM.	WD	PTD	NR	FIXED IN PLACE
*108E	B	SALVAGE, REPAIR & REINSTALL	2' - 4"	6' - 8"	0' - 1 1/2"	WOOD	PTD	CLR. LAM.	WD	PTD	NR	FIXED IN PLACE
*108F	B	SALVAGE, REPAIR & REINSTALL	2' - 4"	6' - 8"	0' - 1 1/2"	WOOD	PTD	CLR. LAM.	WD	PTD	NR	FIXED IN PLACE
*108G	B	SALVAGE, REPAIR & REINSTALL	2' - 4"	6' - 8"	0' - 1 1/2"	WOOD	PTD	CLR. LAM.	WD	PTD	NR	FIXED IN PLACE
*108H	B	SALVAGE, REPAIR & REINSTALL	2' - 4"	6' - 8"	0' - 1 1/2"	WOOD	PTD	CLR. LAM.	WD	PTD	NR	FIXED IN PLACE
*108J	B	SALVAGE, REPAIR & REINSTALL	2' - 4"	6' - 8"	0' - 1 1/2"	WOOD	PTD	CLR. LAM.	WD	PTD	NR	FIXED IN PLACE
*109B	B	SALVAGE, REPAIR & REINSTALL	2' - 4"	6' - 8"	0' - 1 1/2"	WOOD	PTD	CLR. LAM.	WD	PTD	NR	FIXED IN PLACE
*109C	B	SALVAGE, REPAIR & REINSTALL	2' - 4"	6' - 8"	0' - 1 1/2"	WOOD	PTD	CLR. LAM.	WD	PTD	NR	FIXED IN PLACE
*109D	B	SALVAGE, REPAIR & REINSTALL	2' - 4"	6' - 8"	0' - 1 1/2"	WOOD	PTD	CLR. LAM.	WD	PTD	NR	FIXED IN PLACE
*109E	B	SALVAGE, REPAIR & REINSTALL	2' - 4"	6' - 8"	0' - 1 1/2"	WOOD	PTD	CLR. LAM.	WD	PTD	NR	FIXED IN PLACE
*109F	B	SALVAGE, REPAIR & REINSTALL	2' - 4"	6' - 8"	0' - 1 1/2"	WOOD	PTD	CLR. LAM.	WD	PTD	NR	FIXED IN PLACE
*109G	B	SALVAGE, REPAIR & REINSTALL	2' - 4"	6' - 8"	0' - 1 1/2"	WOOD	PTD	CLR. LAM.	WD	PTD	NR	FIXED IN PLACE
*121	G	SALVAGE	2' - 8"	6' - 9"	0' - 1 1/2"	WOOD	PTD					
*122	G	SALVAGE	2' - 8"	6' - 9"	0' - 1 1/2"	WOOD	PTD					
*123	G	SALVAGE	2' - 8"	6' - 9"	0' - 1 1/2"	WOOD	PTD					
*124	G	SALVAGE	2' - 0"	6' - 8"	0' - 1 1/2"	WOOD	PTD					
*125	G	SALVAGE	2' - 8"	6' - 6"	0' - 1 1/2"	WOOD	PTD					
*126	A	SALVAGE	2' - 8"	6' - 6"	0' - 1 1/2"	WOOD	PTD					
*127	E	SALVAGE	6' - 1"	6' - 8"	0' - 1 1/2"	WOOD	PTD					
*220	G	SALVAGE	2' - 6"	6' - 8"	0' - 1 1/2"	WOOD	PTD					
*221	G	SALVAGE	2' - 6"	6' - 8"	0' - 1 1/2"	WOOD	PTD					
*222	G	SALVAGE	2' - 6"	6' - 8"	0' - 1 1/2"	WOOD	PTD					
*223	G	SALVAGE	2' - 6"	6' - 8"	0' - 1 1/2"	WOOD	PTD					
*224	G	SALVAGE	2' - 6"	6' - 8"	0' - 1 1/2"	WOOD	PTD					
*228	G	SALVAGE	2' - 6"	6' - 8"	0' - 1 1/2"	WOOD	PTD					
*229	G	SALVAGE	3' - 0"	6' - 8"	0' - 1 1/2"	WOOD	PTD					

Grand total: 29

DOOR TYPES

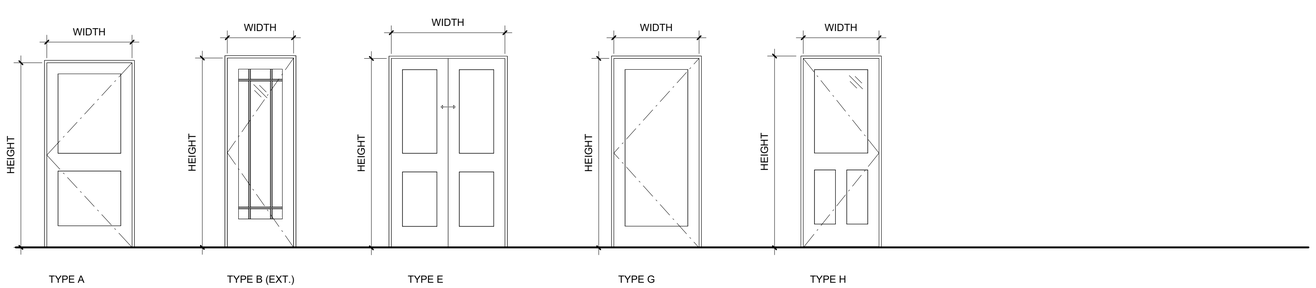

CLIENT

GENERAL SERVICES AGENCY
GSA
COUNTY OF ALAMEDA

ALAMEDA COUNTY

NOTE: If this drawing is not 22"x34" it has been revised from its original size and the scales noted on drawing/details are no longer applicable.

© 2022 Shah Kawasaki Architects

Revision Number	DATE	ISSUE DESCRIPTION
	09/03/2026	PERMIT SET

Project

WHITECOTTON COTTAGE REHABILITATION

15400 FOOTHILL BLVD
SAN LEANDRO, CA 94578

Architect of Record

P&T

Consultant

PAGE & TURNBULL
170 MAIDEN LANE, 5TH FLOOR
SAN FRANCISCO, CA

LICENSED ARCHITECT
JENNIFER BITMENDER
C23018
EX.4/30/2027
STATE OF CALIFORNIA

Drawing Title

DOOR SCHEDULES & TYPES - SALVAGE

Drawing No.

A6.12

SKA Project Number: 25001

WINDOW REPAIR SCHEDULE

LEVEL	WINDOW NO.	WINDOW TYPE	WINDOW DESCRIPTION	WINDOW CONSTR	WINDOW FINISH	DIMENSIONS WIDTH	DIMENSIONS HEIGHT	DIMENSIONS HD. HT.	TREATMENT CAT	TREATMENT HDWR	GLAZING TYPE	GLAZING SAFETY	FIRE RATING	NOTES
BASEMENT	002	F	AWNING	WD	PTD.	3' - 2"	1' - 4"	6' - 5 3/4"	3	R	OBS.	LAM.	NR	
FIRST FLOOR	101	G	DOUBLE-HUNG	WD	PTD.	2' - 6"	5' - 0"	7' - 2 1/4"	2	R	CLR	LAM.	NR	SINGLE ROLLER SHADE
FIRST FLOOR	102	G	DOUBLE-HUNG	WD	PTD.	2' - 10"	5' - 0"	7' - 2 1/4"	2	R	CLR	LAM.	NR	SINGLE ROLLER SHADE
FIRST FLOOR	103	G	DOUBLE-HUNG	WD	PTD.	2' - 6"	5' - 0"	7' - 2 1/4"	2	R	CLR	LAM.	NR	SINGLE ROLLER SHADE
FIRST FLOOR	104	G	DOUBLE-HUNG	WD	PTD.	2' - 10"	4' - 11"	7' - 1 1/4"	2	R	CLR	LAM.	NR	DUAL ROLLER SHADE
FIRST FLOOR	105	G	DOUBLE-HUNG	WD	PTD.	2' - 10"	4' - 11"	7' - 1 1/4"	2	R	CLR	LAM.	NR	DUAL ROLLER SHADE
FIRST FLOOR	106	G	DOUBLE-HUNG	WD	PTD.	2' - 10"	4' - 11"	7' - 1 1/4"	2	R	CLR	LAM.	NR	DUAL ROLLER SHADE
FIRST FLOOR	107	G	DOUBLE-HUNG	WD	PTD.	3' - 8"	4' - 11"	7' - 3"	2	R	CLR	LAM.	NR	SINGLE ROLLER SHADE
FIRST FLOOR	108	G	DOUBLE-HUNG	WD	PTD.	2' - 8"	4' - 11"	7' - 2 3/4"	6	R	CLR	LAM.	NR	ALUMINUM WINDOW TO BE REMOVED. NEW WOOD WINDOW TO BE INSTALLED TO MATCH EXISTING. SINGLE ROLLER SHADE
FIRST FLOOR	109	G	DOUBLE-HUNG	WD	PTD.	3' - 8"	4' - 11"	7' - 3"	6	R	CLR	LAM.	NR	WINDOW INFILL TO BE REMOVED. NEW WOOD WINDOW TO BE INSTALLED TO MATCH EXISTING. SINGLE ROLLER SHADE.
FIRST FLOOR	110	G	DOUBLE-HUNG	WD	PTD.	2' - 8"	4' - 11"	7' - 2 3/4"	6	R	CLR	LAM.	NR	ALUMINUM WINDOW TO BE REMOVED. NEW WOOD WINDOW TO BE INSTALLED TO MATCH EXISTING. SINGLE ROLLER SHADE
FIRST FLOOR	111	G	DOUBLE-HUNG	WD	PTD.	3' - 8"	4' - 11"	7' - 5 3/4"	2	R	CLR	LAM.	NR	SINGLE ROLLER SHADE
FIRST FLOOR	112	G	DOUBLE-HUNG	WD	PTD.	3' - 8"	4' - 11"	7' - 4 3/4"	2	R	CLR	LAM.	NR	SINGLE ROLLER SHADE
FIRST FLOOR	113	G	DOUBLE-HUNG	WD	PTD.	2' - 9"	4' - 11"	7' - 4"	2	R	CLR	LAM.	NR	SINGLE ROLLER SHADE
FIRST FLOOR	115	A	DOUBLE-HUNG	WD	PTD.	2' - 8"	3' - 6"	7' - 2 1/4"	2	R	CLR	LAM.	NR	SINGLE ROLLER SHADE
FIRST FLOOR	116	A	DOUBLE-HUNG	WD	PTD.	2' - 8"	3' - 6"	7' - 2 1/4"	2	R	CLR	LAM.	NR	SINGLE ROLLER SHADE
FIRST FLOOR	117	A	DOUBLE-HUNG	WD	PTD.	2' - 8"	3' - 5"	7' - 2 1/4"	2	R	CLR	LAM.	NR	SINGLE ROLLER SHADE
FIRST FLOOR	118	A	DOUBLE-HUNG	WD	PTD.	2' - 8"	3' - 5"	7' - 2 1/4"	2	R	CLR	LAM.	NR	SINGLE ROLLER SHADE
FIRST FLOOR	119	A	DOUBLE-HUNG	WD	PTD.	2' - 8"	3' - 5"	7' - 2 1/4"	2	R	CLR	LAM.	NR	SINGLE ROLLER SHADE
SECOND FLOOR	201	A	DOUBLE-HUNG	WD	PTD.	3' - 5"	3' - 4"	6' - 5 3/4"	2	R	CLR	LAM.	NR	SINGLE ROLLER SHADE
SECOND FLOOR	202	E	CASEMENT	WD	PTD.	1' - 4"	1' - 6"	6' - 5 1/2"	2	R	CLR	LAM.	NR	SINGLE ROLLER SHADE
SECOND FLOOR	203	F	AWNING	WD	PTD.	1' - 11"	2' - 5"	6' - 5"	2	R	CLR	LAM.	NR	SINGLE ROLLER SHADE
SECOND FLOOR	204	F	AWNING	WD	PTD.	1' - 11"	2' - 5"	6' - 5"	2	R	CLR	LAM.	NR	SINGLE ROLLER SHADE
SECOND FLOOR	205	F	AWNING	WD	PTD.	1' - 11"	2' - 5"	6' - 5"	2	R	CLR	LAM.	NR	SINGLE ROLLER SHADE
SECOND FLOOR	206	E	CASEMENT	WD	PTD.	1' - 4"	1' - 6"	6' - 5 1/2"	2	R	CLR	LAM.	NR	SINGLE ROLLER SHADE
SECOND FLOOR	207	A	DOUBLE-HUNG	WD	PTD.	3' - 8"	3' - 5"	6' - 7"	2	R	CLR	LAM.	NR	SINGLE ROLLER SHADE
SECOND FLOOR	208	A	DOUBLE-HUNG	WD	PTD.	3' - 8"	4' - 0"	6' - 9"	2	R	CLR	LAM.	NR	SINGLE ROLLER SHADE
SECOND FLOOR	209	A	DOUBLE-HUNG	WD	PTD.	3' - 8"	4' - 0"	6' - 8 1/2"	2	R	CLR	LAM.	NR	SINGLE ROLLER SHADE
SECOND FLOOR	210	A	DOUBLE-HUNG	WD	PTD.	2' - 8"	3' - 6"	6' - 6 1/4"	2	R	CLR	LAM.	NR	SINGLE ROLLER SHADE
SECOND FLOOR	211	A	DOUBLE-HUNG	WD	PTD.	3' - 11"	4' - 2"	6' - 6 1/4"	2	R	CLR	LAM.	NR	SINGLE ROLLER SHADE
SECOND FLOOR	212	A	DOUBLE-HUNG	WD	PTD.	2' - 6"	3' - 5"	6' - 5"	2	R	CLR	LAM.	NR	SINGLE ROLLER SHADE
SECOND FLOOR	213	A	DOUBLE-HUNG	WD	PTD.	2' - 6"	2' - 11"	6' - 11 3/4"	2	R	CLR	LAM.	NR	SINGLE ROLLER SHADE
SECOND FLOOR	214	A	DOUBLE-HUNG	WD	PTD.	2' - 6"	2' - 11"	7' - 0 1/4"	2	R	CLR	LAM.	NR	SINGLE ROLLER SHADE
SECOND FLOOR	215	B	TWIN DOUBLE-HUNG	WD	PTD.	5' - 2"	3' - 6"	7' - 3"	3	R	CLR	LAM.	NR	EXISTING CONDITION UNKNOWN. SINGLE ROLLER SHADE
SECOND FLOOR	216	D	DOUBLE CASEMENT, FIXED CENTER	WD	PTD.	5' - 2"	4' - 11"	6' - 5 1/4"	2	R	CLR	LAM.	NR	SINGLE ROLLER SHADE
SECOND FLOOR	217	D	DOUBLE CASEMENT, FIXED CENTER	WD	PTD.	5' - 2"	4' - 11"	6' - 5 1/4"	2	R	CLR	LAM.	NR	SINGLE ROLLER SHADE

LOUVER REPAIR SCHEDULE

LOUVER NO.	LOUVER TYPE	LOUVER EXISTING/NEW	LOUVER DESCRIPTION	LOUVER CONSTR	LOUVER FINISH	DIMENSIONS WIDTH	DIMENSIONS HEIGHT	NOTES
302	H	EXISTING	FIXED LOUVERS	WOOD	PTD	1' - 6"	2' - 8"	REPAIR CATEGORY 2
305	H	EXISTING	FIXED LOUVERS	WOOD	PTD	1' - 0"	1' - 10"	REPAIR CATEGORY 2
307	H	EXISTING	FIXED LOUVERS	WOOD	PTD	1' - 6"	2' - 6"	REPAIR CATEGORY 2

NEW LOUVER SCHEDULE

LOUVER NO.	LOUVER TYPE	LOUVER EXISTING/NEW	LOUVER DESCRIPTION	LOUVER CONSTR	LOUVER FINISH	DIMENSIONS WIDTH	DIMENSIONS HEIGHT	NOTES
301	J	NEW CONSTRUCTION	FIXED LOUVERS	ALUM	PTD	2' - 0"	0' - 9"	
303	J	NEW CONSTRUCTION	FIXED LOUVERS	ALUM	PTD	1' - 0"	2' - 0"	
304	J	NEW CONSTRUCTION	FIXED LOUVERS	ALUM	PTD	1' - 0"	1' - 0"	
306	J	NEW CONSTRUCTION	FIXED LOUVERS	ALUM	PTD	1' - 8"	0' - 6"	

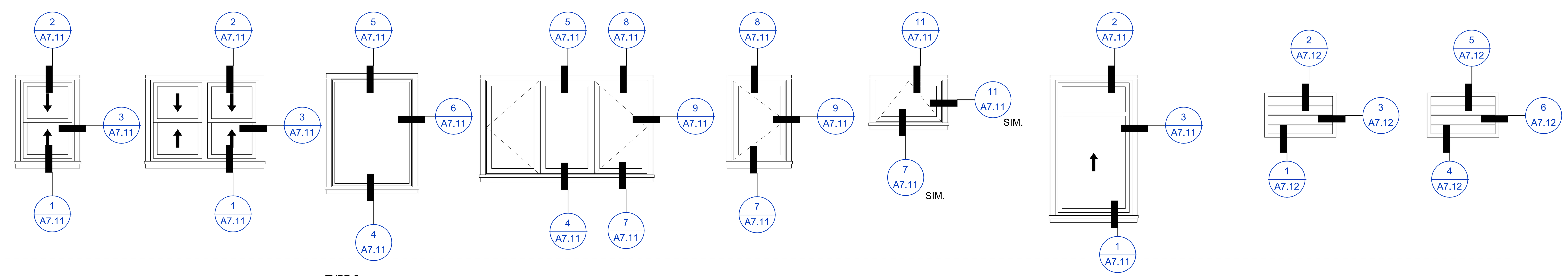

TYPE A DOUBLE HUNG — TYPE B DOUBLE HUNG PAIR — TYPE C FIXED — TYPE D DOUBLE CASEMENT FIXED CENTER — TYPE E CASEMENT — TYPE F AWNING — TYPE G DOUBLE HUNG — TYPE H WOOD — TYPE J ALUMINUM

WOOD WINDOW & LOUVER REPAIRS

REFER TO SPECIFICATION SECTIONS 080160 "HISTORIC TREATMENT OF WOOD WINDOWS" AND 090391 "HISTORIC TREATMENT OF PLAIN PAINTING."

PAINTED SURFACES CONTAIN LEAD. ALL WORK THAT WILL DISTURB PAINTED SURFACES SHALL BE COMPLETED IN ACCORDANCE WITH ALL APPLICABLE FEDERAL, STATE, AND LOCAL REGULATIONS AND COUNTY OF ALAMEDA SPECIFICATIONS INCLUDING DOCUMENT 13 10 20 LEAD HAZARD CONTROL SPECIFICATION.

FOR WOOD LOUVERS, OMIT REPAIR ITEMS BELOW THAT DO NOT APPLY.

ALL CATEGORIES:
1. REMOVE EXISTING PERIMETER SEALANT JOINTS AND REPLACE WITH A SILICONE SEALANT JOINT AND BACKER.
2. REMOVE (E) WEATHERSTRIPPING AND KERF IN WEATHERSTRIPPING AT MEETING RAIL AND SILL OF OPERABLE SASHES
3. ADJUST SASH(ES) FOR PROPER OPERATION.
4. REPLACE COUNTER-WEIGHT SYSTEM AS NEEDED FOR PROPER OPERATION WITH ADDED WEIGHT OF NEW GLAZING.
5. REFURBISH AND LUBRICATE HARDWARE FOR PROPER OPERATION.
6. INSTALL LIMITERS AT OPERABLE WINDOWS WITH A SILL LOWER THAN 42" AFF
7. LEAD PAINT ABATEMENT & REMOVAL AT SASH. ANY DISTURBANCE OF LEAD-BASED PAINT WILL REQUIRE COMPLIANCE WITH ALL APPLICABLE FEDERAL, STATE, AND LOCAL REGULATIONS.

CATEGORY 1: ROUTINE MAINTENANCE
1. REMOVE FAILING/CRACKED PUTTY AND BROKEN GLAZING.
2. REMOVE ALL LOOSE AND UNSOUND LAYERS OF EXISTING PAINTS AND COATINGS.
3. PREPARE, PRIME, AND PAINT OR STAIN SURFACES.
4. INSTALL REPLACEMENT GLAZING, CLIPS, AND PUTTY. PAINT PUTTY.
5. REPLACE MISSING OR BROKEN HARDWARE AS NOTED ON SCHEDULE. RETAIN ALL (E) HARDWARE U.O.N.

CATEGORY 2: REFINISHING
1. REMOVE ALL PUTTY AND GLAZING
2. REMOVE AND SALVAGE ALL HARDWARE. CATALOGUE AND STORE FOR REINSTALLATION U.O.N.
3. REMOVE ALL CAULK AND SEALANTS.
4. REMOVE ALL LOOSE AND UNSOUND LAYERS OF EXISTING PAINTS AND COATINGS.
5. GLUE AND CLAMP SASH JOINTS AS NEEDED.
6. PREPARE, PRIME, AND PAINT OR STAIN SURFACES.
7. REINSTALL GLAZING, CLIPS, AND PUTTY. PAINT PUTTY.
8. INSTALL REHABILITATED HARDWARE AS NOTED AND SPECIFIED.
9. REPLACE MISSING OR BROKEN STOPS AS NEEDED TO MATCH ORIGINAL.

CATEGORY 3: STABILIZATION
IN ADDITION TO THE WORK DESCRIBE IN CATEGORY 2, COMPLETE THE FOLLOWING:
1. REMOVE ALL WEATHERED, GRAY, OR RED-BROWN SPOTS, OR OTHERWISE UNSOUND WOOD.
2. REMOVE DETERIORATED WOOD COMPLETELY. WIDEN ALL CHECKS TO EXPOSE SOUND CLEAN WOOD FOR REPAIR. SEE DETAILS.
3. APPLY BORATE PRESERVATIVE AND CLEAR WATER REPELLANT WOOD PRESERVATIVE TO ALL BARE WOOD.
4. PATCH WITH REPAIR COMPOUND AND/OR WOOD DUTCHMAN TO AREAS GREATER THAN 1/4" DEEP OR WIDE. SEE DETAILS.

CATEGORY 4: COMPONENT REPLACEMENT
IN ADDITION TO THE WORK DESCRIBE IN CATEGORIES 2 & 3, COMPLETE THE FOLLOWING:
1. WHERE WOOD MATERIAL EXHIBITS DETERIORATION AT MORE THAN 20% BUT LESS THAN 50% OF THE SURFACE AREA, COMPLETE DUTCHMAN REPAIR SPLICED INTO SOUND ORIGINAL WOOD.
2. FOR WINDOW COMPONENTS WITH MORE THAN 50% DETERIORATION, REPLACE COMPONENT IN-KIND USING CARPENTRY METHODS EXHIBITED IN THE ORIGINAL WOOD WORK.

CATEGORY 5: NEW WOOD SASH
1. REMOVE WINDOW SASH FROM FRAME. SALVAGE GOOD, SOUND PORTIONS, COMPONENTS, AND HARDWARE FOR POTENTIAL REUSE AT OTHER LOCATIONS.
2. PROVIDE AND INSTALL NEW WOOD WINDOW SASH AND HARDWARE TO MATCH ORIGINAL APPEARANCE. MATCH ALL DIMENSIONS, PROFILES, MATERIALS, CONSTRUCTION, AND FINISHES.

CATEGORY 6: NEW WOOD FRAME AND SASH
1. REMOVE WINDOW SASH AND FRAME. SALVAGE GOOD, SOUND PORTIONS, COMPONENTS, AND HARDWARE FOR POTENTIAL REUSE AT OTHER LOCATIONS.
2. PROVIDE AND INSTALL NEW WOOD WINDOW SASH, AND HARDWARE TO MATCH ORIGINAL APPEARANCE. MATCH ALL DIMENSIONS, PROFILES, MATERIALS, CONSTRUCTION, AND FINISHES. V.I.F. INTEGRITY OF FRAME AND TRIM IN-PLACE. REPLACE SASH WEIGHTS.

WINDOW SCHEDULE NOTES

1. CONTRACTOR TO ENSURE PROPER WORKING ORDER AND WEATHERTIGHTNESS. CONTRACTOR SHALL PERFORM SURVEY OF ALL (E) WINDOW OPENINGS. VERIFY THE QUANTITY AND CONDITION OF FRAME, SASH, GLAZING, FLASHING, AND HARDWARE. NOTIFY ARCHITECT WHEN DIFFERENCES BETWEEN THOSE DEPICTED IN THESE DOCUMENTS ARE FOUND.
2. WINDOW DIMENSIONS ARE NOMINAL. FIELD VERIFY ALL (E) OPENINGS AND NEW OPENINGS WHEN ALIGNING WITH (E).NOTIFY ARCHITECT WHEN DIFFERENCES BETWEEN THOSE DEPICTED IN THESE DOCUMENTS ARE FOUND.
3. CONTRACTOR SHALL SURVEY (E) HARDWARE AND VERIFY WORKING ORDER OF LOCKS, PULLS, HINGES, PULLEYS, AND CORDS, WHERE OCCUR. SALVAGE, CATALOGUE FOR REHABILITATION, AND REINSTALL HARDWARE IN ORIGINAL LOCATIONS, U.O.N. IN SCHEDULE.
4. REMOVE ALL NON-HISTORIC AND/OR NON-FUNCTIONING FASTENERS, CONDUITS, AND ACCESSORIES, INCLUDING WINDOW TREATMENTS AND PROTECTIVE COVERS AND PLYWOOD. PATCH WINDOW ASSEMBLY SUBSTRATE(S) PRIOR TO APPLICATION OF FINISH, TYP.
5. CONTRACTOR SHALL PROTECT ALL (E) MATERIALS AND FINISHES TO REMAIN FROM DAMAGE DURING CONSTRUCTION. PROVIDE PROTECTION AS INDICATED AND NEEDED.
6. MATCH PROFILES AND DIMENSIONS OF (E) MOULDINGS/ELEMENTS.
7. CONTRACTOR IS RESPONSIBLE FOR DAMAGE TO HISTORIC MATERIALS DURING CONSTRUCTION. ADDITIONALLY, CONTRACTOR IS RESPONSIBLE FOR REPAIR/REPLACEMENT COSTS.
8. PATCH AND REPAIR ALL EXTERIOR AND INTERIOR FINISHES SCHEDULED TO REMAIN INCLUDING TILE, WOOD, GYP. BOARD, PAINT, DECORATIVE PAINT, AND PLASTER ASSOCIATED WITH REMOVAL, REPAIR, OR INSTALLATION OF WINDOWS.
9. PATCH SUBSTRATE AS NEEDED TO MATCH ADJACENT WHERE ELEMENTS/FEATURES ARE BEING REMOVED OR DEMOLISHED.
10. WHERE FERROUS ELEMENTS OR ANCHORS ARE EXPOSED BY THE WORK, REMOVE CORROSION, PREPARE, PRIME, AND PAINT, TYP.
11. REMOVE ALL EXISTING CAULKING AND SEALANT. INSTALL (N) AT DISSIMILAR MATERIALS AS NEEDED. PAINT ALL URETHANE AND HYBRID SEALANT.
12. REPAIR DAMAGED INTERIOR TRIM TO MATCH EXISTING. REPLACE TO MATCH EXISTING WHERE MISSING OR DETERIORATED BEYOND REPAIR, TYP. PREPARE, PRIME, AND PAINT.
13. ALL GLASS TO REMAIN UNLESS BROKEN. REPLACEMENT GLASS SHALL BE TEMPERED IF REQUIRED BY CODE.
14. REPAIR CATEGORIES ARE ASSUMED TO BE CAT 2 WHERE WINDOW ELEMENTS ARE INACCESSIBLE OR CONCEALED BY PARTITIONS, CEILINGS, WINDOW TREATMENTS, MILLWORK, OR OTHER OBSTRUCTIONS TO BE REMOVED. CONTRACTOR TO ASSESS AND VERIFY FOLLOWING DEMOLITION OR WHEN ACCESS IS AVAILABLE.
15. PAINTS AND SEALANTS INSTALLED PRIOR TO 1978 ARE LIKELY TO CONTAIN LEAD AND OTHER HAZARDOUS MATERIALS, PERFORM WORK IN ACCORDANCE WITH ALL FEDERAL, STATE, AND LOCAL REQUIREMENTS.

SCHEDULE ABBREVIATIONS

GLAZING TYPE KEY - ALL NEW GLAZING

CLR — CLEAR GLASS
OBS — OBSCURE GLASS
LAM — LAMINATED PANE

HARDWARE KEY

(E) — EXISTING TO REMAIN
(R) — REPLACE HDWR. INCLUDING COUNTERWEIGHT SYSTEM

FIRE RATING

NR — NOT RATED

SAFETY GLAZING - WINDOWS

SAFETY GLAZING (NEW/REPLACEMENT GLAZING ONLY) AT A MIN. AT:
- GLAZING WITHIN 24" OF A DOOR, 60" AFF OR BELOW (2406.4.2)
- GLASS PANES MORE THAN 9 SF IN AREA, WHERE THE BOTTOM IS LESS THAN 18" AND THE TOP MORE THAN 36" AFF, WITHIN 36" OF A WALKING SURFACE. (2406.4.3)
- GLAZING AT STAIRS, RAMPS, OR INTERMEDIATE LANDINGS, LESS THAN 60" ABOVE THE WALKING SURFACE (2406.4.6)
- GLAZING AT STAIRS BOTTOM LANDINGS, LESS THAN 60" ABOVE THE WALKING SURFACE AND WITHIN 60" OF THE BOTTOM TREAD (2406.4.7)

CLIENT

GENERAL SERVICES AGENCY — GSA — COUNTY OF ALAMEDA

ALAMEDA COUNTY

NOTE: If this drawing is not 22"x34" it has been revised from its original size and the scales noted on drawing/details are no longer applicable.
© 2022 Shah Kawasaki Architects

Revision Number	DATE	ISSUE DESCRIPTION
	09/03/2026	PERMIT SET

Project

WHITECOTTON COTTAGE REHABILITATION

15400 FOOTHILL BLVD
SAN LEANDRO, CA 94578

Architect of Record: P&T

Consultant: PAGE & TURNBULL, 170 MAIDEN LANE, 5TH FLOOR, SAN FRANCISCO, CA

LICENSED ARCHITECT — PETER BIRKHOLZ — C23418 — EX.4/30/2027 — STATE OF CALIFORNIA

Drawing Title: WINDOW SCHEDULES & TYPES

Drawing No. A6.21

SKA Project Number: 25001

MATERIAL & FINISH SCHEDULE

MATERIAL			PRODUCT						
No.	TYPE	DESCRIPTION	MFR	NUMBER	NAME	COLOR	SIZE	SLIP RESISTANCE	REMARKS
CARPET									
CP-1	CARPET	CARPET TILE	MOHAWK	BT637	PIXELATED PATH	934 PEARL HAZE	24" X 24" TILE	22OZ/YD2 PILE, ADHERED	
CEILING									
CL-1	CEILING	GYPSUM WALL BOARD CEILING, PLASTER SKIM COAT, PAINTED	PER GC			PT-1	5/8"		EGGSHELL FINISH
CL-2	CEILING	GYPSUM WALL BOARD CEILING, PAINTED	PER GC			PT-1	5/8"		EGGSHELL FINISH
CL-3	CEILING	EXPOSED JOISTS	N/A	N/A	N/A	N/A	N/A	N/A	
CERAMIC TILE									
CT-1	CERAMIC TILE	CERAMIC FLOOR TILE	DALTILE	SB35	PETAL HEXAGON	GRAY HEXAGON TILES WITH BLUE AND YELLOW PETALS	4" X 4"	≥0.42 DCOF	FINISH: MATTE DCOF > 0.42 PER ANSI A137.1-A326.3
CT-2	CERAMIC TILE	CERAMIC TRIM TILE	DALTILE	A34C1MOD	COLOR WHEEL TRIM	DESERT GRAY	4" X 12"		ROUND TOP COVE BASE
FLOOR TILE									
VCT-1	FLOOR TILE	CLASS IIII PRINTED VINYL PLANK	NORA BY INTERFACE	A000209	NATURAL WOOD GRAINS	MAHOGANY	20" X 40"	≥0.55 DCOF	FOLLOW MAN'F INSTALLATION INSTRUCTIONS
FLOORING									
EXST-WD-1	FLOORING	EXISTING WOOD STAIR TREADS, REFINISHED				STN-1			
PAINT									
PT-1	PAINT	INTERIOR PAINT - ZERO-VOC	BENJAMIN MOORE	2148-60		TIMID WHITE			FLAT AT CEILINGS, EGGSHELL AT WALLS
PT-2	PAINT	INTERIOR PAINT - ZERO-VOC	BENJAMIN MOORE	AF-70		BATTENBERG			EGGSHELL AT WALLS
PT-3	PAINT	INTERIOR PAINT - ZERO-VOC	BENJAMIN MOORE	HC-161		TEMPLETON GREY			SEMIGLOSS AT TRIM, EGGSHELL AT WALLS
PT-4	PAINT	INTERIOR PAINT - ZERO-VOC	BENJAMIN MOORE	AF-95		HUSH			SEMIGLOSS AT TRIM
TRANSITION STRIP									
TS-1	TRANSITION STRIP	TRANSITION STRIP	SCHLUTER		SCHIENE	BRUSHED SS 304 (EB)	AS REQUIRED		
WALL BASE									
WB-1	WALL BASE	RUBBER WALL BASE	NORA BY INTERFACE		ART 820	6202 ARMADILLO	4" H		
WB-2	WALL BASE	WOOD WALL BASE, STAINED				STN-1			TO MATCH EXISTING
WALL PANEL									
FRP-1	WALL PANEL	FIBER-REINFORCED PANEL	MARLITE	WHITE	STANDARD FRP	P100 WHITE CLASS C	4'X8'		CUT TO SIZE
WINDOW COVERING									
SC-1	WINDOW COVERING	WINDOW SHADES	MECHOSHADE	ECOVEIL SCREENS 1350 SERIES	5% OPEN	1766 EGGSHELL	100" W MATERIAL		MANUAL SHADES IN RECESSED POCKET
SC-2	WINDOW COVERING	BLACKOUT SHADES	MECHOSHADE	CHELSEA BLACKOUT 0250 SERIES	OPAQUE	0253 GRAPHITE	126" W MATERIAL		MANUAL SHADES IN RECESSED POCKET

ROOM FINISH SCHEDULE

No.	NAME	FLOOR FINISH	BASE FINISH	WALL FINISH	TRIM FINISH	CEILING FINISH	CASEWORK	WINDOW COVERING
003	STORAGE 1	VCT-1	WB-1	PT-2	PT-4	CL-4, PT-1		
101	RECEPTION	VCT-1	WB-2	PT-2	PT-4	CL-1, PT-1		SC-1, SC-2
102	OPEN OFFICE	CP-1	WB-2	PT-2	PT-4	CL-1, PT-1		SC-1, SC-2
103	STAFF CONFERENCE ROOM	CP-1	WB-2	PT-2	PT-4	CL-1, PT-1		SC-1, SC-2
104	IT CLOSET	VCT-1	WB-2	PT-2	PT-4	CL-3, PT-1		
105	JANITOR CLOSET	VCT-1	WB-1	PT-2	PT-4	CL-3, PT-1		
106	RESTROOM	CT-1	CT-2	PT-1	PT-3	CL-3, PT-1		SC-1, SC-2
107	TRAINING ROOM	VCT-1	WB-2	PT-2	PT-4	CL-1, PT-1		SC-1, SC-2
108	MEDIUM CONFERENCE ROOM	VCT-1	WB-2	PT-2	PT-4	CL-1, PT-1		SC-1, SC-2
109	SMALL CONFERENCE ROOM	VCT-1	WB-2	PT-2	PT-4	CL-1, PT-1		SC-1, SC-2
110	STOR.	VCT-1	WB-2	PT-2	PT-4	CL-2, PT-1		
111	HALL 1	VCT-1	WB-2	PT-2	PT-4	CL-2, PT-1		
112	HALL 2	CP-1	WB-2	PT-2	PT-4	CL-1, PT-1		
114	STAIR	EXST-WD-1	WB-2	PT-2	PT-4			
201	STAIR HALL	VCT-1	WB-2	PT-2	PT-4	CL-1, PT-1		
202	MEETING ROOM	CP-1	WB-2	PT-2	PT-4	CL-1, PT-1		SC-1, SC-2
203	PERSONAL OFFICE	CP-1	WB-2	PT-2	PT-4	CL-1, PT-1		SC-1, SC-2
204	PERSONAL OFFICE	CP-1	WB-2	PT-2	PT-4	CL-1, PT-1		SC-1, SC-2
205	BREAK ROOM	VCT-1	WB-2	PT-2	PT-4	CL-1, CL-3, PT-1		SC-1, SC-2
206	STAFF RESTROOM	CT-1	CT-2	PT-1	PT-3	CL-3, PT-1		SC-1, SC-2
207	OPEN OFFICE	CP-1	WB-2	PT-2	PT-4	CL-1, PT-1		SC-1, SC-2
208	PERSONAL OFFICE	CP-1	WB-2	PT-2	PT-4	CL-1, PT-1		SC-1, SC-2
210	CLOSET	VCT-1	WB-2	PT-2	PT-4	CL-3, PT-1		
301	ATTIC							

CLIENT

ALAMEDA COUNTY

NOTE: If this drawing is not 22"x34" it has been revised from its original size and the scales noted on drawing/details are no longer applicable.

© 2022 Shah Kawasaki Architects

Revision Number	DATE	ISSUE DESCRIPTION
	09/03/2026	PERMIT SET

Project

WHITECOTTON COTTAGE REHABILITATION

15400 FOOTHILL BLVD
SAN LEANDRO, CA 94578

Architect of Record

P&T

Consultant

PAGE & TURNBULL
170 MAIDEN LANE, 5TH FLOOR
SAN FRANCISCO, CA

LICENSED ARCHITECT
DAVIER BITMENDAY
C23018
EX.4/30/2027
STATE OF CALIFORNIA

Drawing Title

ROOM FINISH SCHEDULES

Drawing No.

A6.41

SKA Project Number: 25001

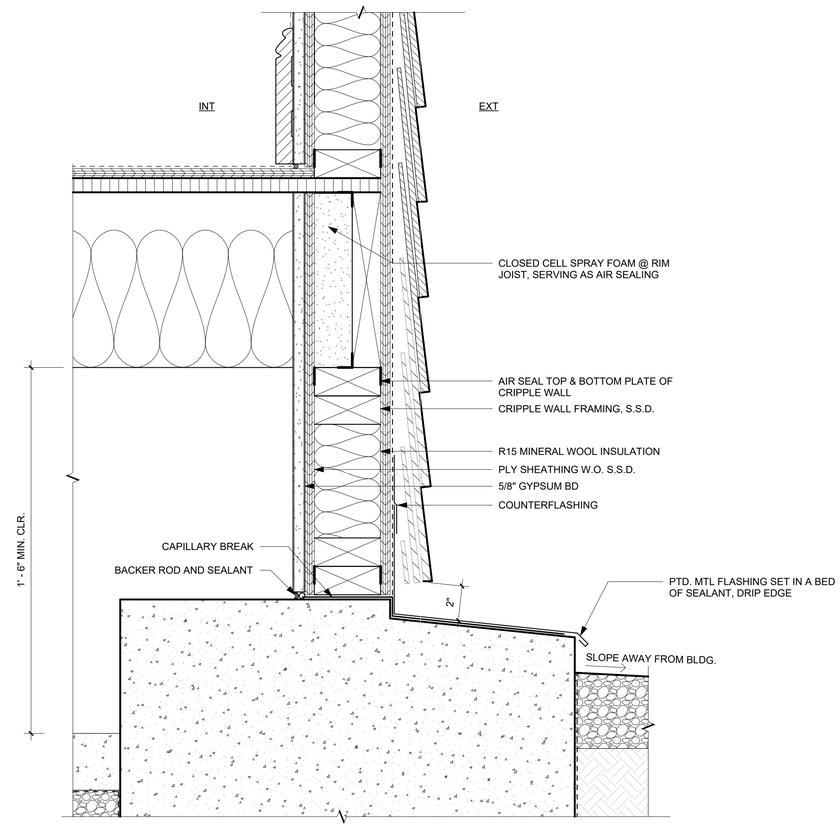

NOTE:

1. SEE 5 / A7.01 FOR TYPICAL NOTES

11 TYP. EXT. CRIPPLE WALL ASSEMBLY - BASEMENT
3" = 1'-0"

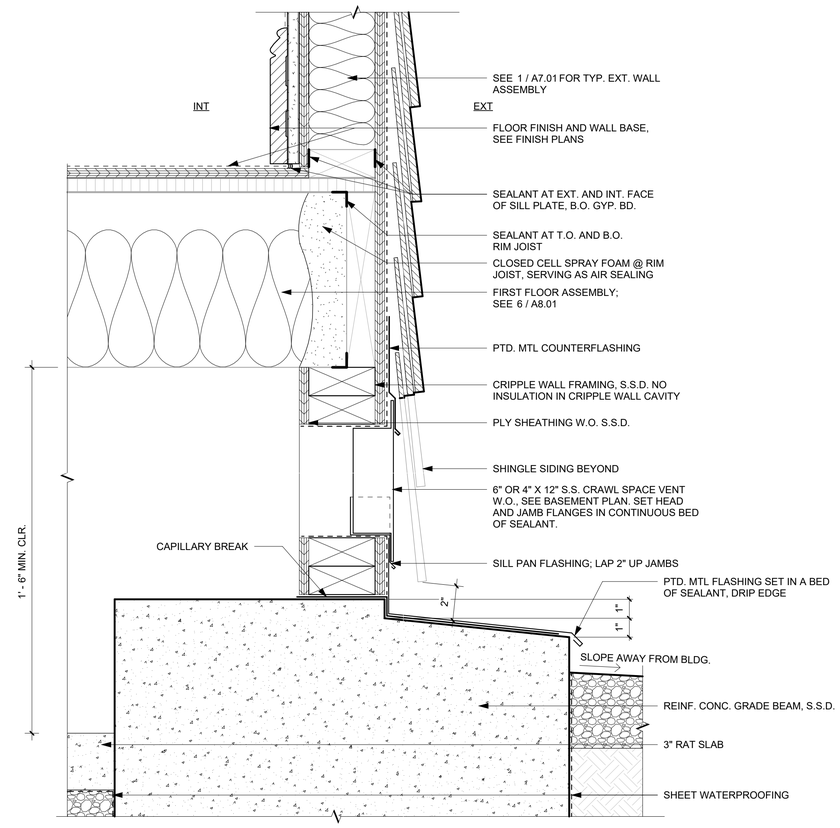

NOTE:

1. S.S.D. FOR SHEAR PANEL LOCATIONS AND NAILING SCHEDULE

5 TYP. EXT. CRIPPLE WALL ASSEMBLY - CRAWL SPACE
3" = 1'-0"

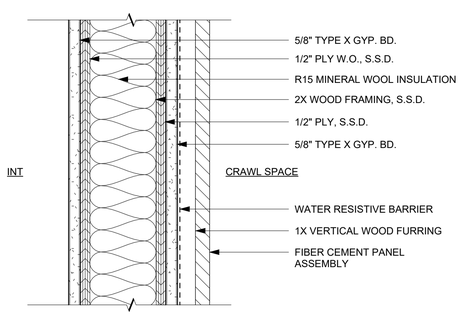

NOTE:

1. SEE 8 / A7.02 FOR TYP. AIR SEALING @ TOP & SILL PLATES

10 LIFT/CRIPPLE WALL ASSEMLY - SECTION
3" = 1'-0"

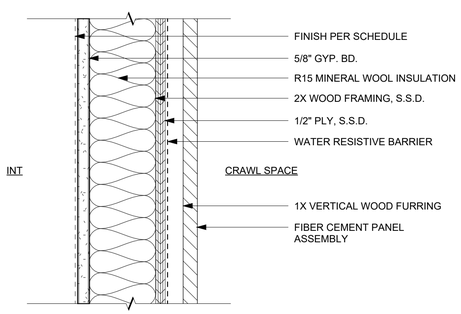

NOTE:

1. SEE 8 / A7.02 FOR TYP. AIR SEALING @ TOP & SILL PLATES

7 BASEMENT/CRIPPLE WALL ASSEMLY - SECTION
3" = 1'-0"

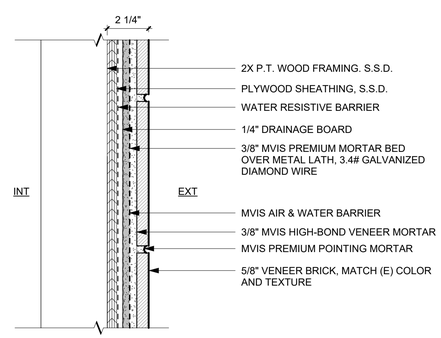

4 EXT. CHIMNEY WALL ASSEMBLY - SECTION
3" = 1'-0"

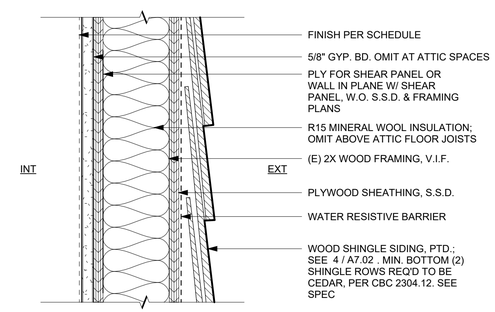

NOTE:

1. S.S.D. FOR SHEAR PANEL LOCATIONS AND NAILING SCHEDULE
2. SEE 8 / A7.02 FOR TYP. AIR SEALING @ TOP & SILL PLATES

1 TYP. EXT. WALL ASSEMBLY - SECTION
3" = 1'-0"

CLIENT

GENERAL SERVICES AGENCY GSA COUNTY OF ALAMEDA

ALAMEDA COUNTY

NOTE: If this drawing is not 22"x34" it has been revised from its original size and the scales noted on drawing/details are no longer applicable.

© 2022 Shah Kawasaki Architects

Revision Number	DATE	ISSUE DESCRIPTION
	09/03/2026	PERMIT SET

Project

WHITECOTTON COTTAGE REHABILITATION

15400 FOOTHILL BLVD
SAN LEANDRO, CA 94578

Architect of Record

P&T

Consultant

PAGE & TURNBULL
170 MAIDEN LANE, 5TH FLOOR
SAN FRANCISCO, CA

LICENSED ARCHITECT PETER BIRABREN C23018 EX.4/30/2027 STATE OF CALIFORNIA

Drawing Title

EXTERIOR DETAILS - WALL, BASE, SOFFIT

Drawing No.

A7.01

SKA Project Number: 25001

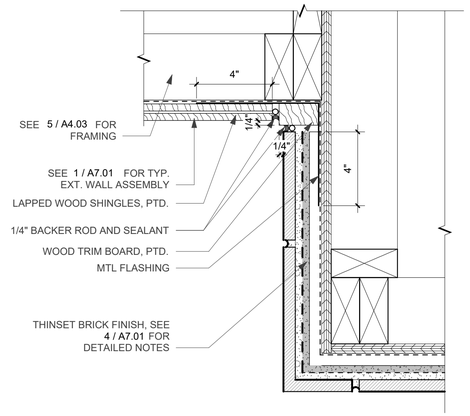

9 BRICK VENEER AT WOOD SHINGLES - PLAN
3" = 1'-0"

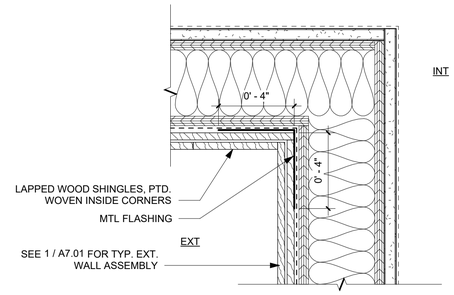

6 TYP. SHINGLES INSIDE CORNER
3" = 1'-0"

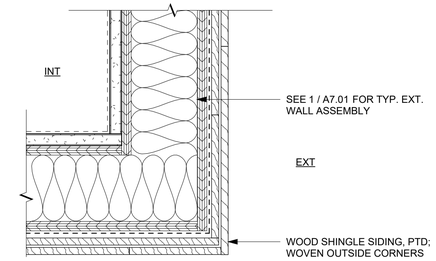

3 TYP. SHINGLES OUTSIDE CORNER
3" = 1'-0"

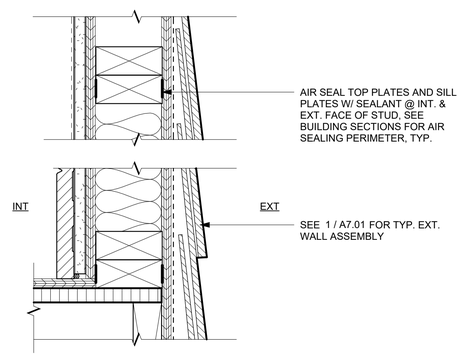

8 TYP. EXT. WALL ASSEMBLY - AIR SEALING
3" = 1'-0"

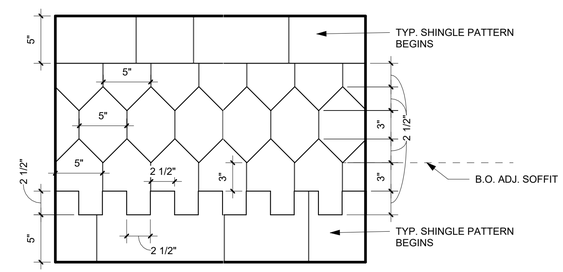

NOTES:

1. ALL DIMENSIONS ARE TYP. SEE ELEVATIONS FOR LOCATIONS
2. ASSUME ALL SHINGLES WILL BE CUSTOM CUT
3. SPACE INDIVIDUAL SHINGLES 1/8" FROM ONE ANOTHER HORIZONTALLY.
4. PROVIDE 2'X2' MOCKUP PRIOR TO COMPLETE INSTALLATION.

5 DECORATIVE SHINGLE PATTERN
1 1/2" = 1'-0"

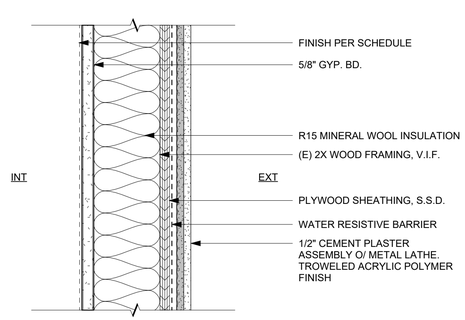

NOTE:

1. SEE 8 / A7.02 FOR TYP. AIR SEALING @ TOP & SILL PLATES

7 CEMENT PLASTER WALL ASSEMBLY - SECTION
3" = 1'-0"

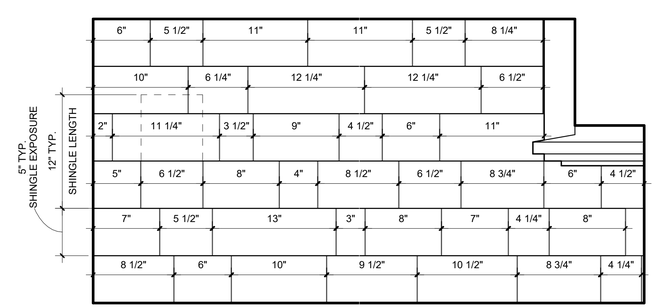

NOTES:

1. SHINGLE PATTERN AS DEPICTED WAS MEASURED FROM THE EDGE OF A WALL TO THE ADJ. WINDOW SILL. PATTERN AS SHOWN SHALL BE USED AS A TYPICAL REFERENCE FOR SHINGLE SIZE DIFFERENTIATION THROUGHOUT.
2. ASSUME ALL SHINGLES WILL BE RIPPED TO SIZE MANUALLY/CUSTOM CUT
3. SPACE INDIVIDUAL SHINGLES 1/8" FROM ONE ANOTHER HORIZONTALLY.
4. IF IDENTIFIED WIDTHS ARE NOT AVAILABLE, INSTALL SHINGLES WITH TIGHT VERTICAL BUTTS W/ PAINTABLE SEALANT AT JOINT TO PROVIDE EQUIVALENT PATTERN.
5. PROVIDE 4'X4' MOCKUP PRIOR TO COMPLETE INSTALLATION.

4 TYP. SHINGLE PATTERN
1 1/2" = 1'-0"

CLIENT

GENERAL SERVICES AGENCY GSA COUNTY OF ALAMEDA

ALAMEDA COUNTY

NOTE: If this drawing is not 22"x34" it has been revised from its original size and the scales noted on drawing/details are no longer applicable.

© 2022 Shah Kawasaki Architects

Revision Number	DATE	ISSUE DESCRIPTION
	09/03/2026	PERMIT SET

Project

WHITECOTTON COTTAGE REHABILITATION
15400 FOOTHILL BLVD
SAN LEANDRO, CA 94578

Architect of Record

P&T

Consultant

PAGE & TURNBULL
170 MAIDEN LANE, 5TH FLOOR
SAN FRANCISCO, CA

LICENSED ARCHITECT JENNIFER BITNER-KOZ C23018 EX.4/30/2027 STATE OF CALIFORNIA

Drawing Title

EXTERIOR DETAILS - WALL, BASE, SOFFIT

Drawing No.

A7.02

SKA Project Number: 25001

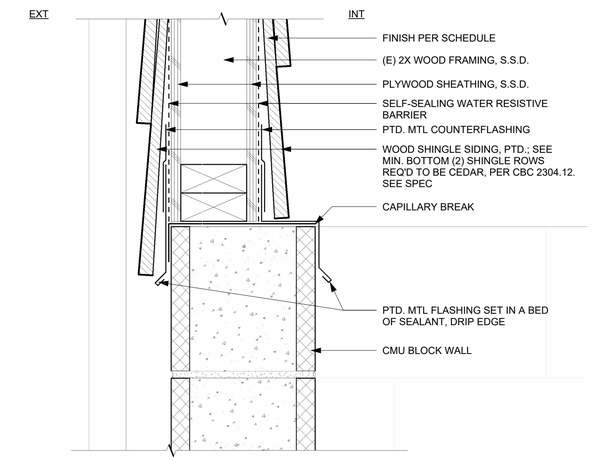

2 TYP. EXT. WALL MATERIAL CHANGE AT TRASH ENCLOSURE
3" = 1'-0"

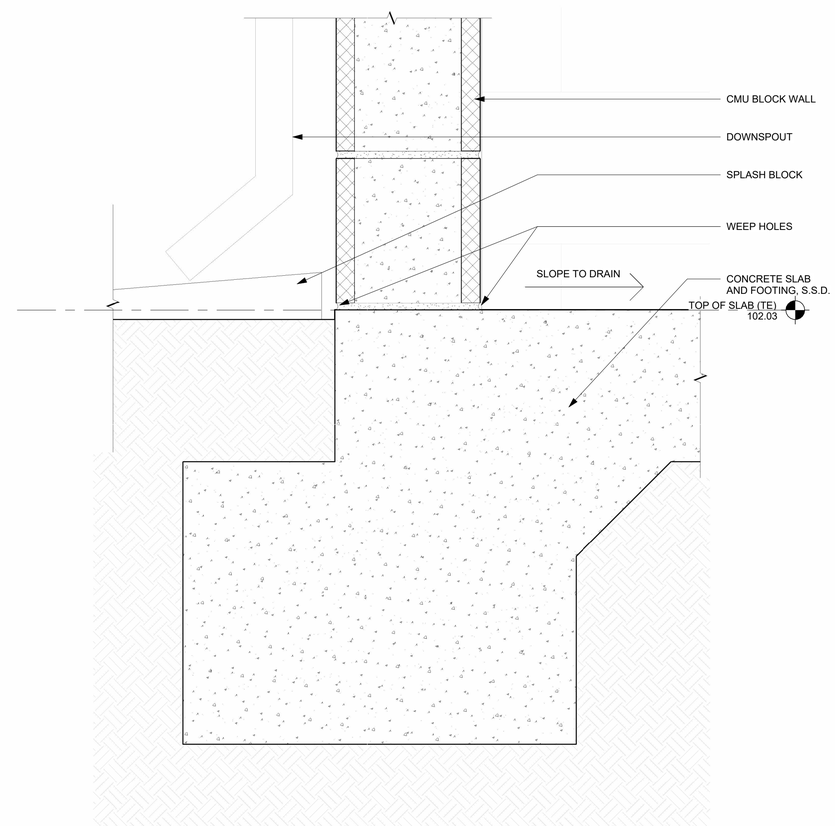

1 TYP. EXT. WALL BASE AT TRASH ENCLOSURE
3" = 1'-0"

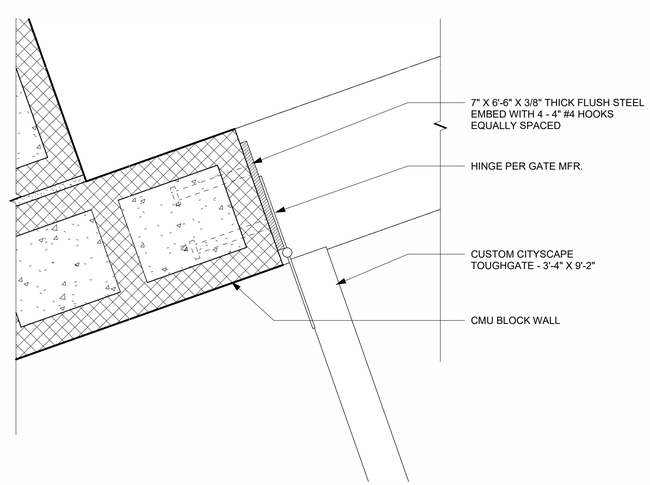

3 TRASH ENCLOSURE GATE HINGE
3" = 1'-0"

CLIENT

GENERAL SERVICES AGENCY
GSA
COUNTY OF ALAMEDA

ALAMEDA COUNTY

NOTE: If this drawing is not 22"x34" it has been revised from its original size and the scales noted on drawing/details are no longer applicable.

© 2022 Shah Kawasaki Architects

Revision Number	DATE	ISSUE DESCRIPTION
	09/03/2026	PERMIT SET

Project

WHITECOTTON COTTAGE REHABILITATION

15400 FOOTHILL BLVD
SAN LEANDRO, CA 94578

Architect of Record

P&T

Consultant

PAGE & TURNBULL
170 MAIDEN LANE, 5TH FLOOR
SAN FRANCISCO, CA

LICENSED ARCHITECT
PETER BIRUMAS
C23026
EX.4/30/2027
STATE OF CALIFORNIA

Drawing Title

EXTERIOR DETAILS - WALL, BASE, SOFFIT

Drawing No.

A7.03

SKA Project Number: 25001

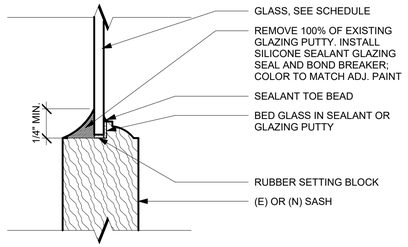

12 WINDOW/DOOR REGLAZING
6" = 1'-0"

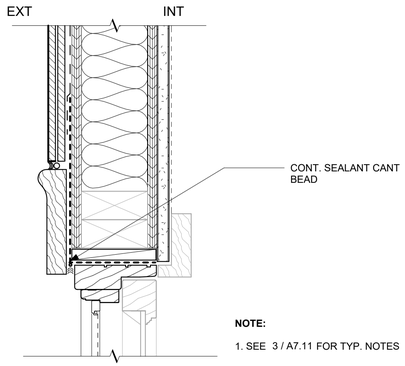

NOTE:

1. SEE 3 / A7.11 FOR TYP. NOTES

9 TYP. CASEMENT WINDOW JAMB
3" = 1'-0"

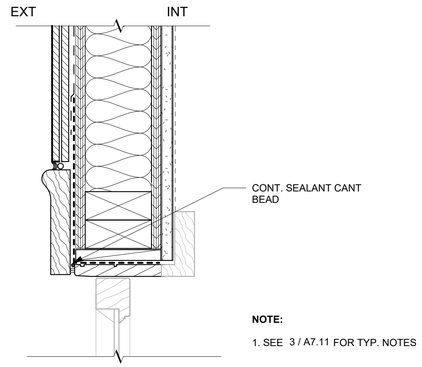

NOTE:

1. SEE 3 / A7.11 FOR TYP. NOTES

6 TYP. FIXED WINDOW JAMB
3" = 1'-0"

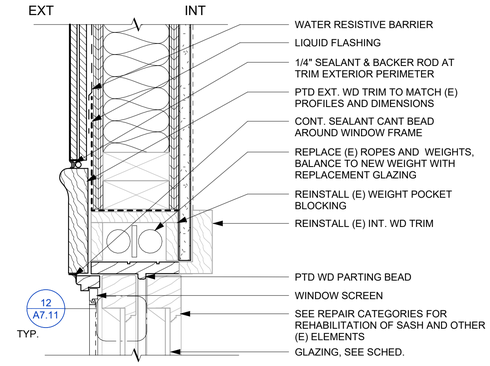

3 TYP. DOUBLE HUNG WINDOW JAMB
3" = 1'-0"

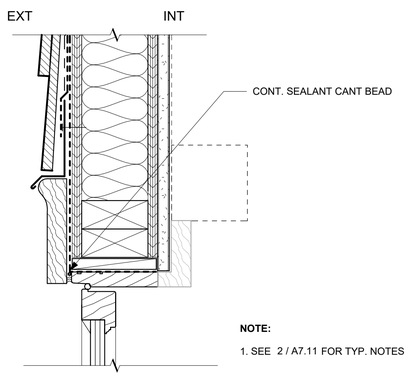

NOTE:

1. SEE 2 / A7.11 FOR TYP. NOTES

11 TYP. AWNING WINDOW HEAD/JAMB SIM
3" = 1'-0"

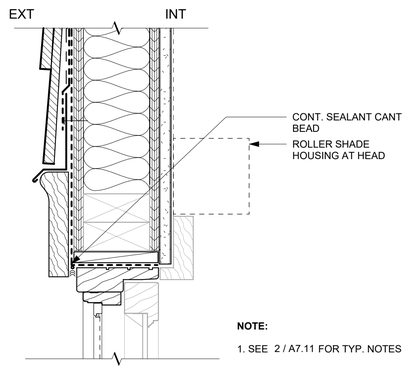

NOTE:

1. SEE 2 / A7.11 FOR TYP. NOTES

8 TYP. CASEMENT WINDOW HEAD
3" = 1'-0"

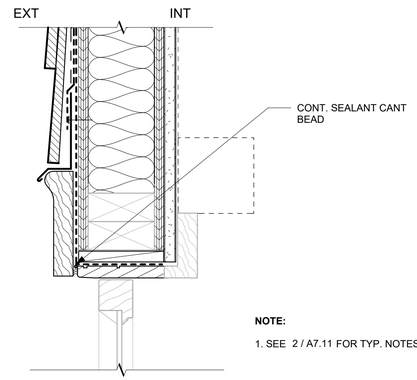

NOTE:

1. SEE 2 / A7.11 FOR TYP. NOTES

5 TYP. FIXED WINDOW HEAD
3" = 1'-0"

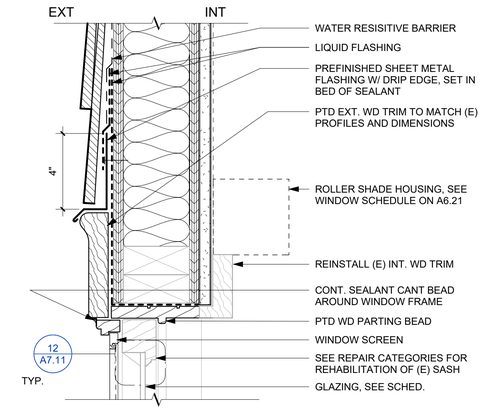

2 TYP. DOUBLE HUNG WINDOW HEAD
3" = 1'-0"

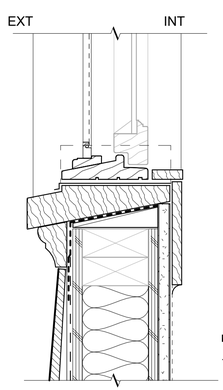

NOTE:

1. SEE 1 / A7.11 FOR TYP. NOTES

7 TYP. CASEMENT WINDOW SILL
3" = 1'-0"

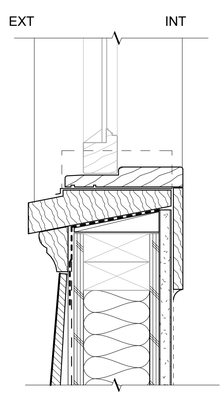

NOTE:

1. SEE 1 / A7.11 FOR TYP. NOTES

4 TYP. FIXED WINDOW SILL
3" = 1'-0"

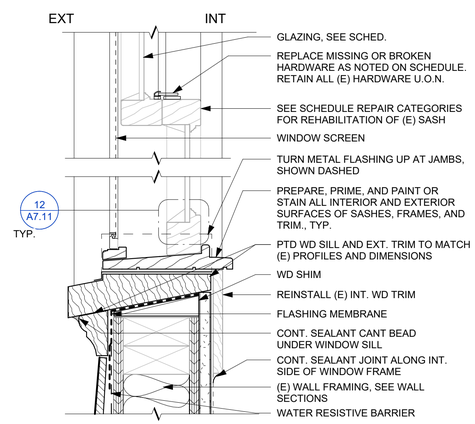

1 TYP. DOUBLE HUNG WINDOW SILL
3" = 1'-0"

CLIENT

GENERAL SERVICES AGENCY COUNTY OF ALAMEDA GSA

ALAMEDA COUNTY

NOTE: If this drawing is not 22"x34" it has been revised from its original size and the scales noted on drawing/details are no longer applicable.

© 2022 Shah Kawasaki Architects

Revision Number	DATE	ISSUE DESCRIPTION
	09/03/2026	PERMIT SET

Project

WHITECOTTON COTTAGE REHABILITATION

15400 FOOTHILL BLVD
SAN LEANDRO, CA 94578

Architect of Record

P&T

Consultant

PAGE & TURNBULL
170 MAIDEN LANE, 5TH FLOOR
SAN FRANCISCO, CA

LICENSED ARCHITECT
PETER BITRUNCZ
C23018
EX.4/30/2027
STATE OF CALIFORNIA

Drawing Title

EXTERIOR DETAILS - WINDOWS

Drawing No.

A7.11

SKA Project Number: 25001

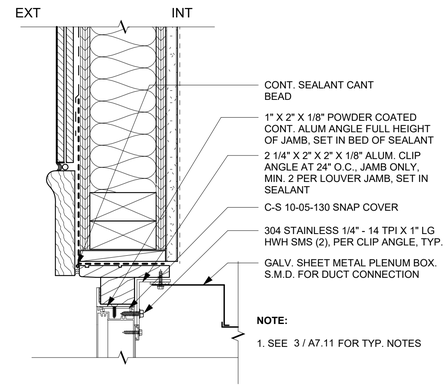

6 TYP. NEW LOUVER JAMB
3" = 1'-0"

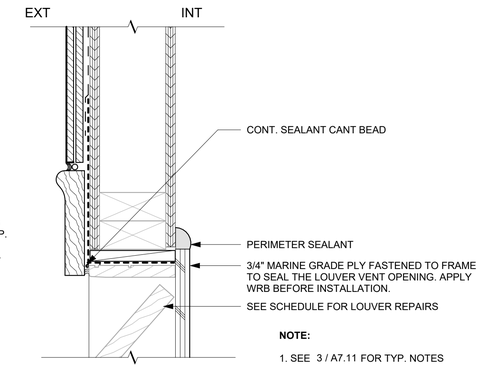

3 WOOD LOUVER REPAIR JAMB
3" = 1'-0"

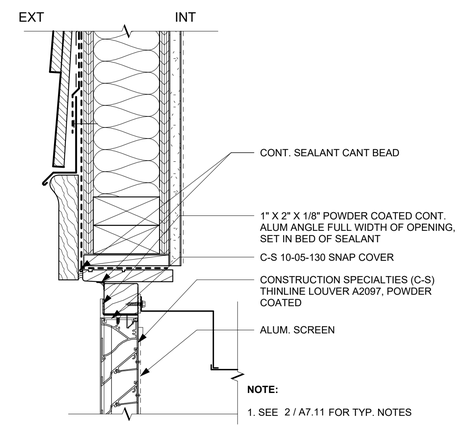

5 TYP. NEW LOUVER HEAD
3" = 1'-0"

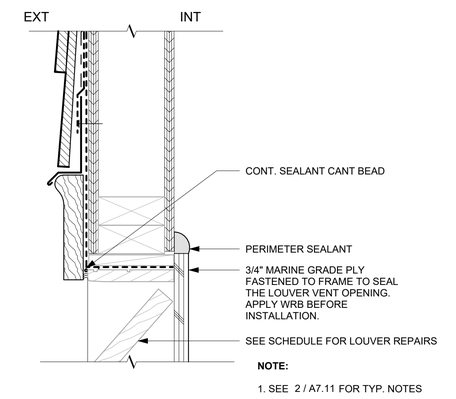

2 WOOD LOUVER REPAIR HEAD
3" = 1'-0"

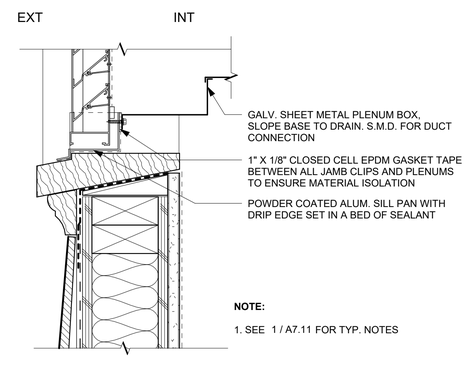

4 TYP. NEW LOUVER SILL
3" = 1'-0"

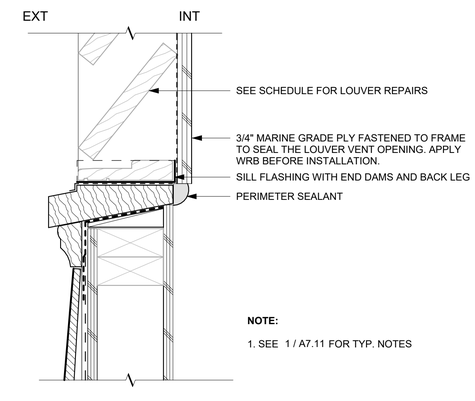

1 WOOD LOUVER REPAIR SILL
3" = 1'-0"

CLIENT

ALAMEDA COUNTY

NOTE: If this drawing is not 22"x34" it has been revised from its original size and the scales noted on drawing/details are no longer applicable.

© 2022 Shah Kawasaki Architects

Revision Number	DATE	ISSUE DESCRIPTION
	09/03/2026	PERMIT SET

Project

WHITECOTTON COTTAGE REHABILITATION

15400 FOOTHILL BLVD
SAN LEANDRO, CA 94578

Architect of Record

Consultant

PAGE & TURNBULL
170 MAIDEN LANE, 5TH FLOOR
SAN FRANCISCO, CA

LICENSED ARCHITECT
PETER BIRKINSHAW
C23018
EX.4/30/2027
STATE OF CALIFORNIA

Drawing Title

EXTERIOR DETAILS - LOUVERS

Drawing No.

A7.12

SKA Project Number: 25001

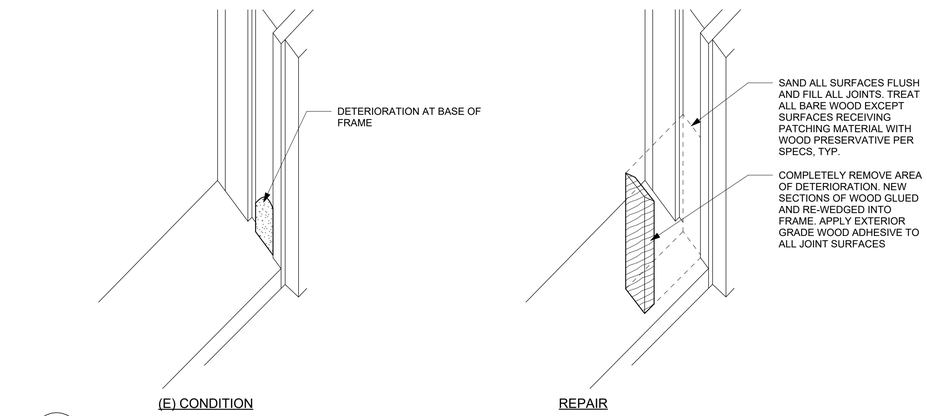

5 WOOD DUTCHMAN REPAIR AT WINDOW FRAME, TYP.
1 1/2" = 1'-0"

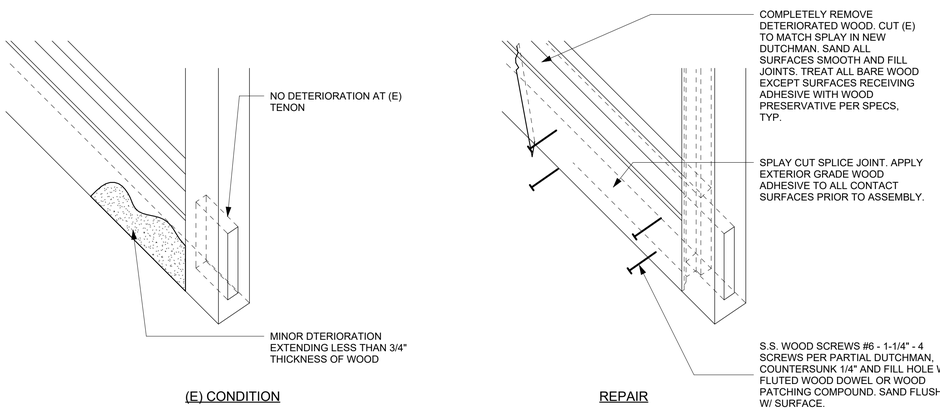

4 WOOD DUTCHMAN REPAIR AT SASH RAIL, TYP.
1 1/2" = 1'-0"

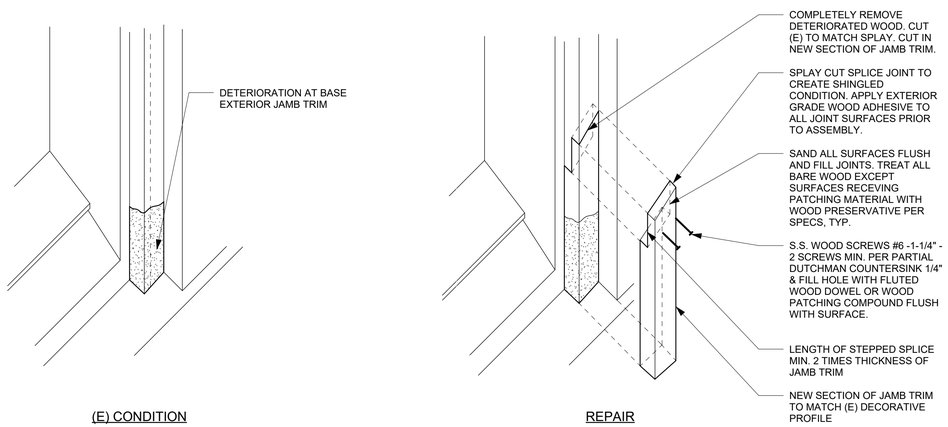

3 WOOD DUTCHMAN REPAIR, TYP.
1 1/2" = 1'-0"

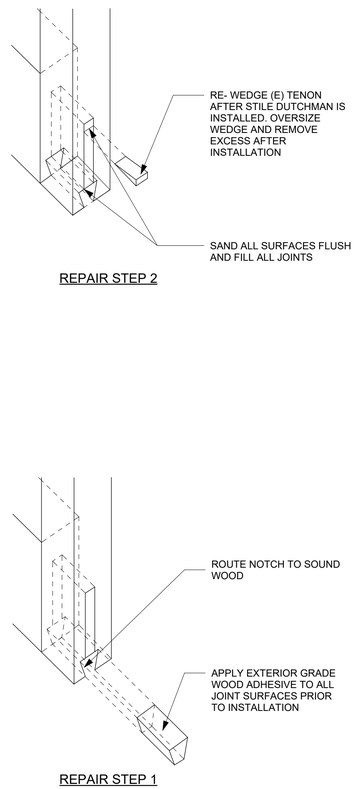

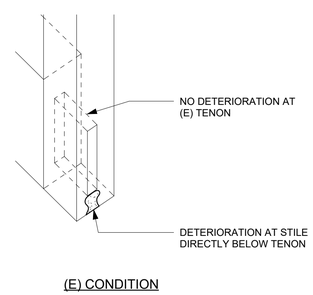

2 WOOD DUTCHMAN REPAIR AT SASH STILE, TYP.
1 1/2" = 1'-0"

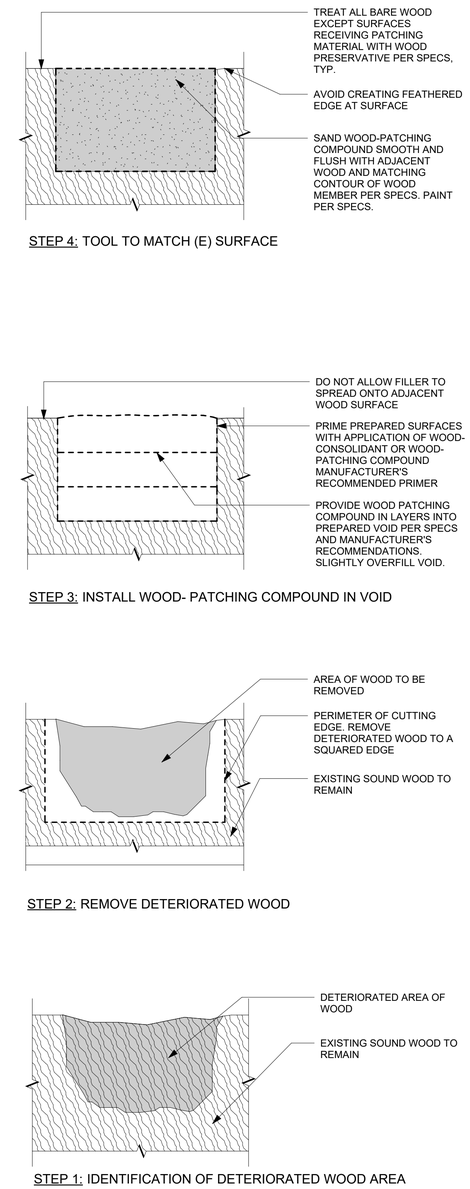

1 WOOD PATCHING, TYP.
3" = 1'-0"

CLIENT

GENERAL SERVICES AGENCY GSA COUNTY OF ALAMEDA

ALAMEDA COUNTY

NOTE: If this drawing is not 22"x34" it has been revised from its original size and the scales noted on drawing/details are no longer applicable.

© 2022 Shah Kawasaki Architects

Revision Number	DATE	ISSUE DESCRIPTION
	09/03/2026	PERMIT SET

Project

WHITECOTTON COTTAGE REHABILITATION

15400 FOOTHILL BLVD
SAN LEANDRO, CA 94578

Architect of Record

P&T

Consultant

PAGE & TURNBULL
170 MAIDEN LANE, 5TH FLOOR
SAN FRANCISCO, CA

LICENSED ARCHITECT PETER BIRMINGHAM C23018 EX.4/30/2027 STATE OF CALIFORNIA

Drawing Title

EXTERIOR DETAILS - WOOD REPAIR

Drawing No.

A7.13

SKA Project Number: 25001

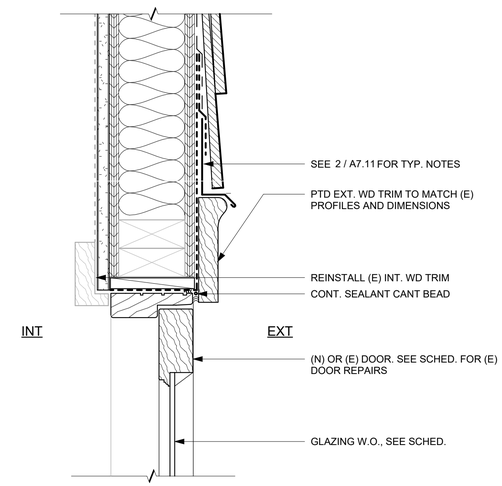

2 TYP. EXT DOOR HEAD/JAMB
3" = 1'-0"

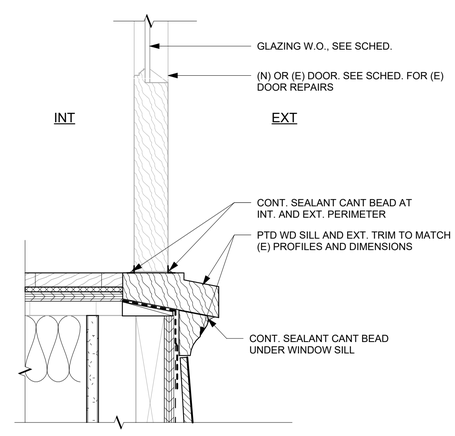

4 TYP. EXT DOOR THRESHOLD - FIXED
3" = 1'-0"

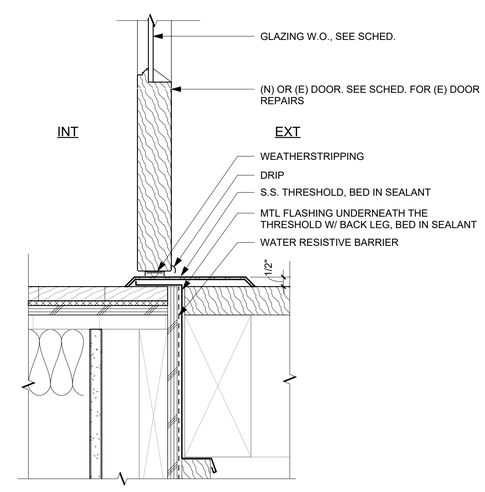

1 TYP. EXT DOOR THRESHOLD
3" = 1'-0"

CLIENT

ALAMEDA COUNTY

NOTE: If this drawing is not 22"x34" it has been revised from its original size and the scales noted on drawing/details are no longer applicable.

© 2022 Shah Kawasaki Architects

Revision Number	DATE	ISSUE DESCRIPTION
	09/03/2026	PERMIT SET

Project

WHITECOTTON COTTAGE REHABILITATION

15400 FOOTHILL BLVD
SAN LEANDRO, CA 94578

Architect of Record

P&T

Consultant

PAGE & TURNBULL
170 MAIDEN LANE, 5TH FLOOR
SAN FRANCISCO, CA

LICENSED ARCHITECT
PETER BIRKHOLZ
C23030
EX.4/30/2027
STATE OF CALIFORNIA

Drawing Title

EXTERIOR DETAILS - DOORS

Drawing No.

A7.31

SKA Project Number: 25001

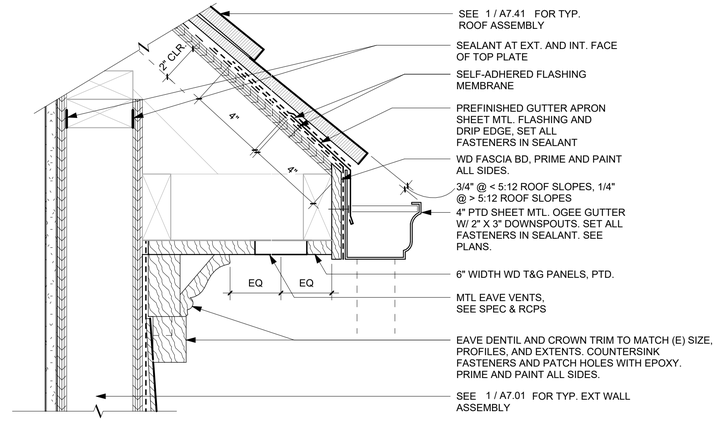

12 ASPHALT SHINGLE ROOF - EAVE W/ GUTTER
3" = 1'-0"

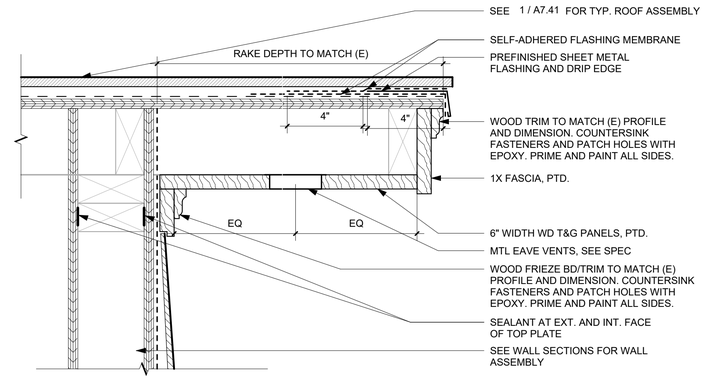

6 ASPHALT SHINGLE ROOF - RAKE
3" = 1'-0"

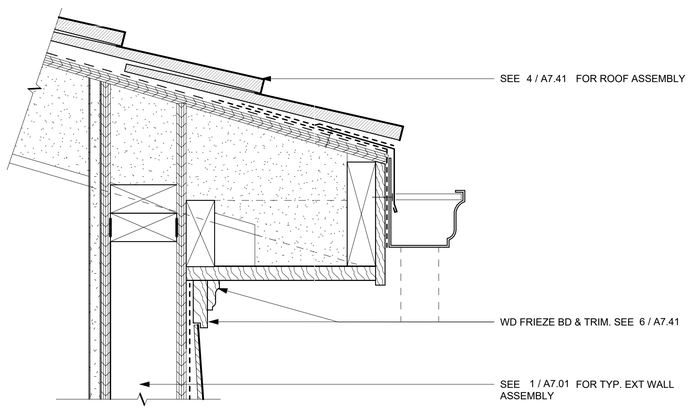

NOTE:

1. SEE 12 / A7.41 FOR TYPICAL NOTES

11 ASPHALT SHINGLE ROOF - EAVE - LIFT (UNVENTILATED)
3" = 1'-0"

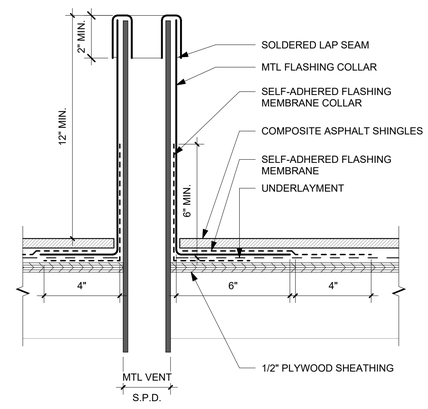

5 ASPHALT SHINGLE ROOF - PIPE PENETRATION
3" = 1'-0"

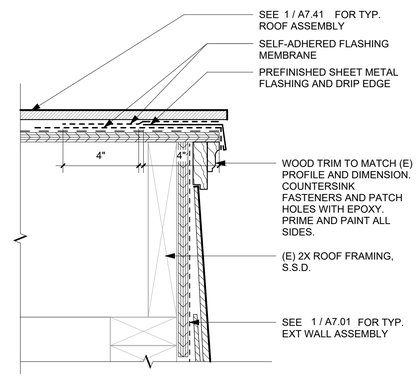

2 ASPHALT SHINGLE ROOF - GABLE RAKE
3" = 1'-0"

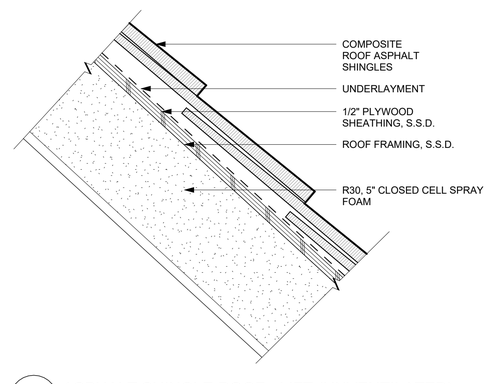

4 ASPHALT SHINGLE ROOF - LIFT (UNVENTILATED)
3" = 1'-0"

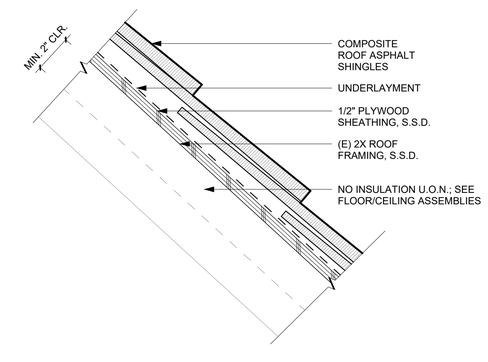

1 TYP. ASPHALT SHINGLE ROOF (VENTILATED)
3" = 1'-0"

CLIENT

ALAMEDA COUNTY

NOTE: If this drawing is not 22"x34" it has been revised from its original size and the scales noted on drawing/details are no longer applicable.

© 2022 Shah Kawasaki Architects

Revision Number	DATE	ISSUE DESCRIPTION
	09/03/2026	PERMIT SET

Project

WHITECOTTON COTTAGE REHABILITATION

15400 FOOTHILL BLVD
SAN LEANDRO, CA 94578

Architect of Record

P&T

Consultant

PAGE & TURNBULL
170 MAIDEN LANE, 5TH FLOOR
SAN FRANCISCO, CA

LICENSED ARCHITECT
PETER BITHERMAN
C23018
EX.4/30/2027
STATE OF CALIFORNIA

Drawing Title

EXTERIOR DETAILS - ROOFS

Drawing No.

A7.41

SKA Project Number: 25001

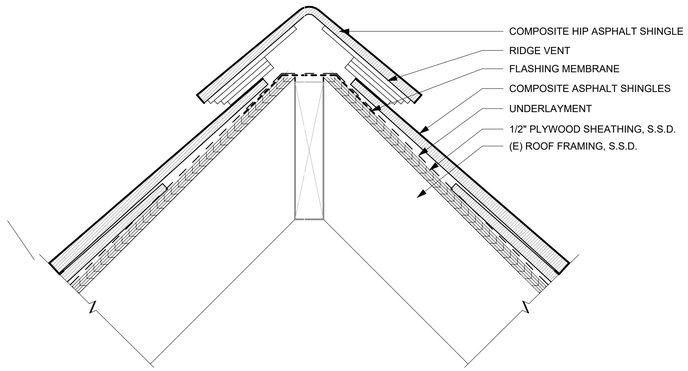

12 ASPHALT SHINGLE ROOF - RIDGE - TYP.
3" = 1'-0"

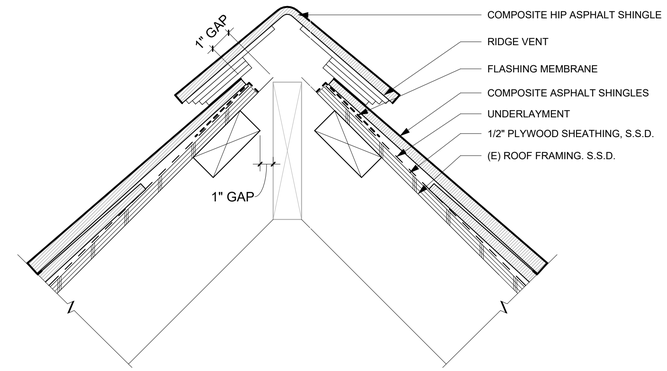

6 ASPHALT SHINGLE ROOF - RIDGE - VENT
3" = 1'-0"

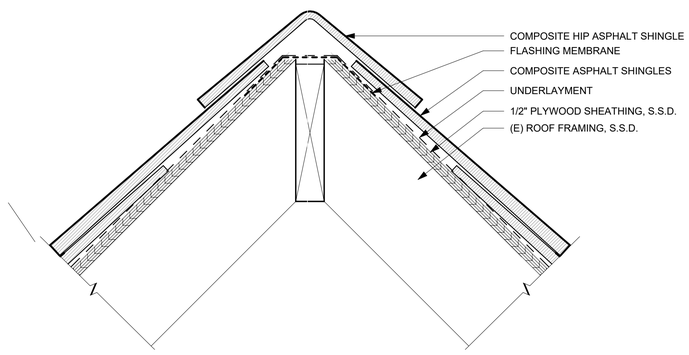

11 ASPHALT SHINGLE ROOF - HIP
3" = 1'-0"

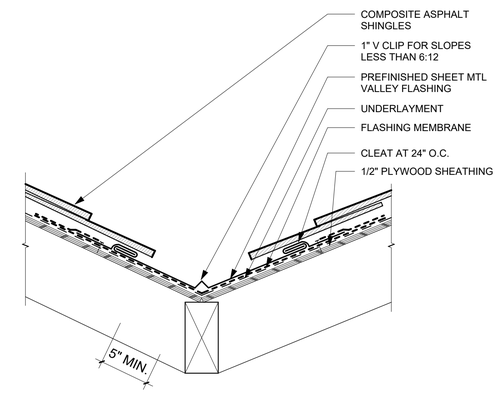

2 ASPHALT SHINGLE ROOF - VALLEY
1 1/2" = 1'-0"

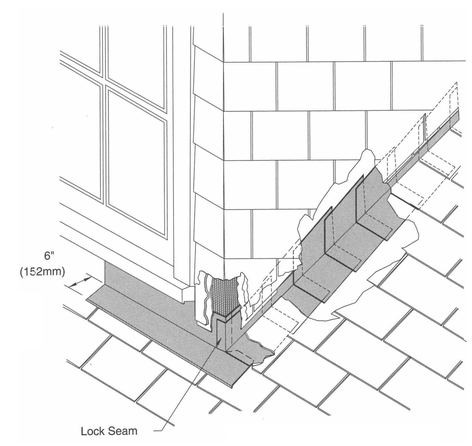

4 ASPHALT SHINGLE - STEP FLASHING @ DORMER

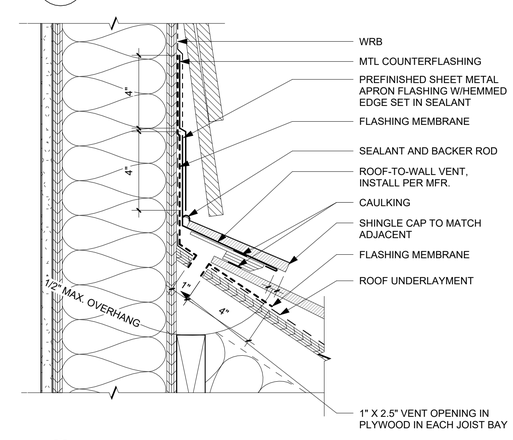

1 ASPHALT SHINGLE ROOF - HEADWALL
3" = 1'-0"

CLIENT

ALAMEDA COUNTY

NOTE: If this drawing is not 22"x34" it has been revised from its original size and the scales noted on drawing/details are no longer applicable.

© 2022 Shah Kawasaki Architects

Revision Number	DATE	ISSUE DESCRIPTION
	09/03/2026	PERMIT SET

Project

WHITECOTTON COTTAGE REHABILITATION

15400 FOOTHILL BLVD
SAN LEANDRO, CA 94578

Architect of Record

P&T

Consultant

PAGE & TURNBULL
170 MAIDEN LANE, 5TH FLOOR
SAN FRANCISCO, CA

LICENSED ARCHITECT
SAYER BIRABENT
C23018
EX.4/30/2027
STATE OF CALIFORNIA

Drawing Title

EXTERIOR DETAILS - ROOFS

Drawing No.

A7.42

SKA Project Number: 25001

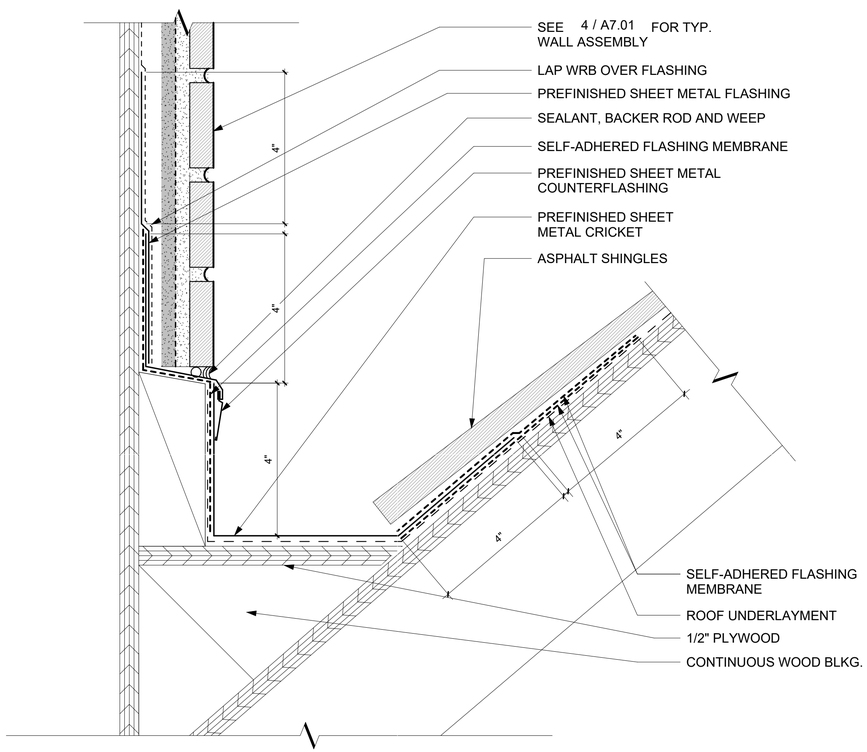

2 BRICK VENEER FLASHING AT CRICKET
6" = 1'-0"

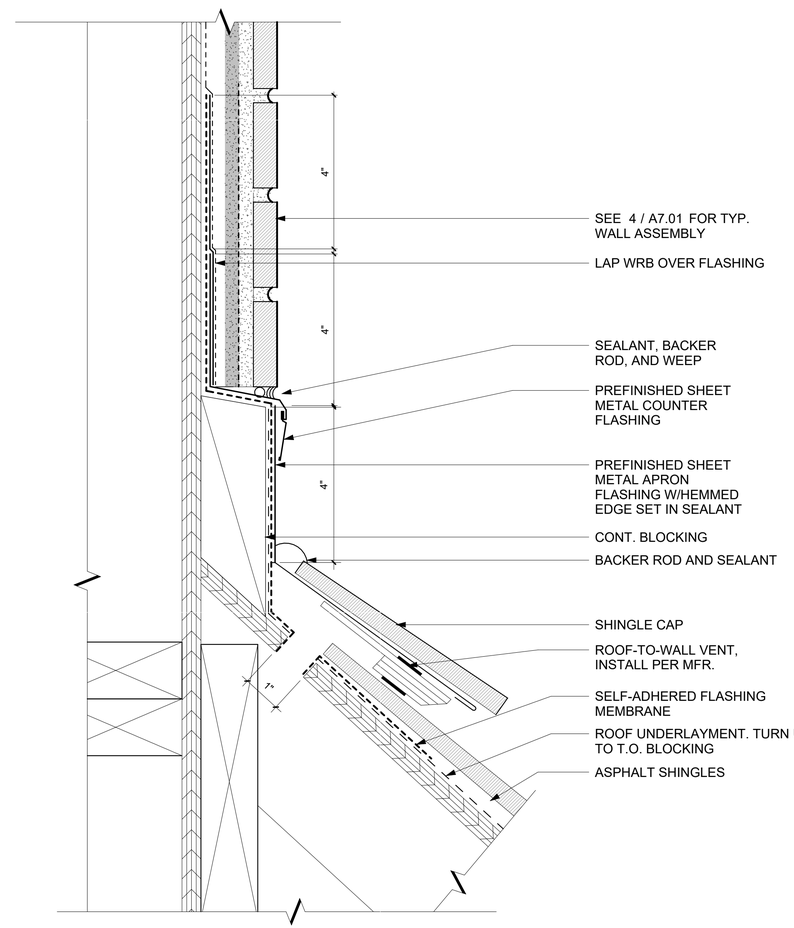

1 BRICK VENEER FLASHING AT ASPHALT SHINGLE HEADWALL
6" = 1'-0"

CLIENT

ALAMEDA COUNTY

NOTE: If this drawing is not 22"x34" it has been revised from its original size and the scales noted on drawing/details are no longer applicable.

© 2022 Shah Kawasaki Architects

Revision Number	DATE	ISSUE DESCRIPTION
	09/03/2026	PERMIT SET

Project

WHITECOTTON COTTAGE REHABILITATION

15400 FOOTHILL BLVD
SAN LEANDRO, CA 94578

Architect of Record

P&T

Consultant

PAGE & TURNBULL
170 MAIDEN LANE, 5TH FLOOR
SAN FRANCISCO, CA

LICENSED ARCHITECT
PETER BIRMINGHAM
C23018
EX.4/30/2027
STATE OF CALIFORNIA

Drawing Title

EXTERIOR DETAILS - ROOFS

Drawing No.

A7.43

SKA Project Number: 25001

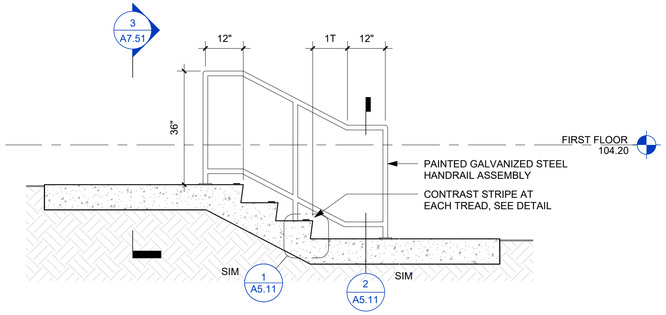

4 SECTION - NORTH ENTRY STAIR, CONCRETE
1/2" = 1'-0"

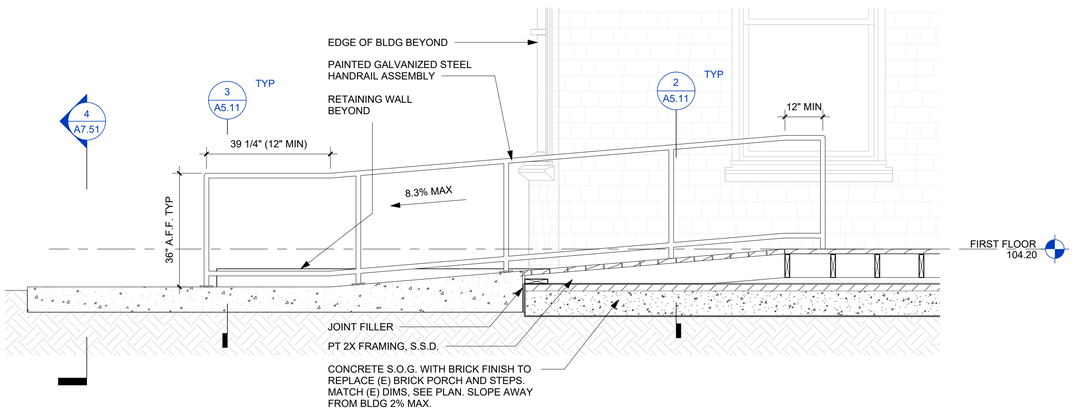

3 SECTION - NORTH ENTRY RAMP
1/2" = 1'-0"

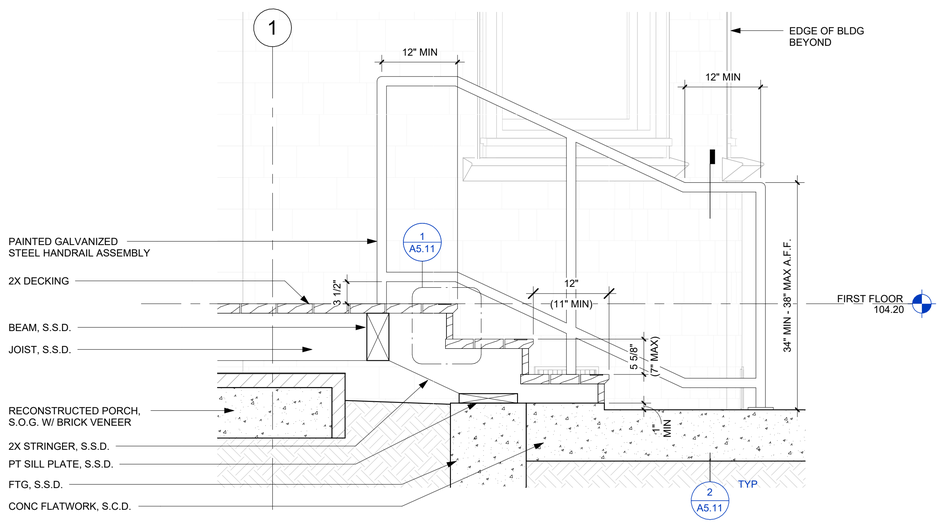

2 SECTION - NORTH ENTRY STAIR, WOOD
1" = 1'-0"

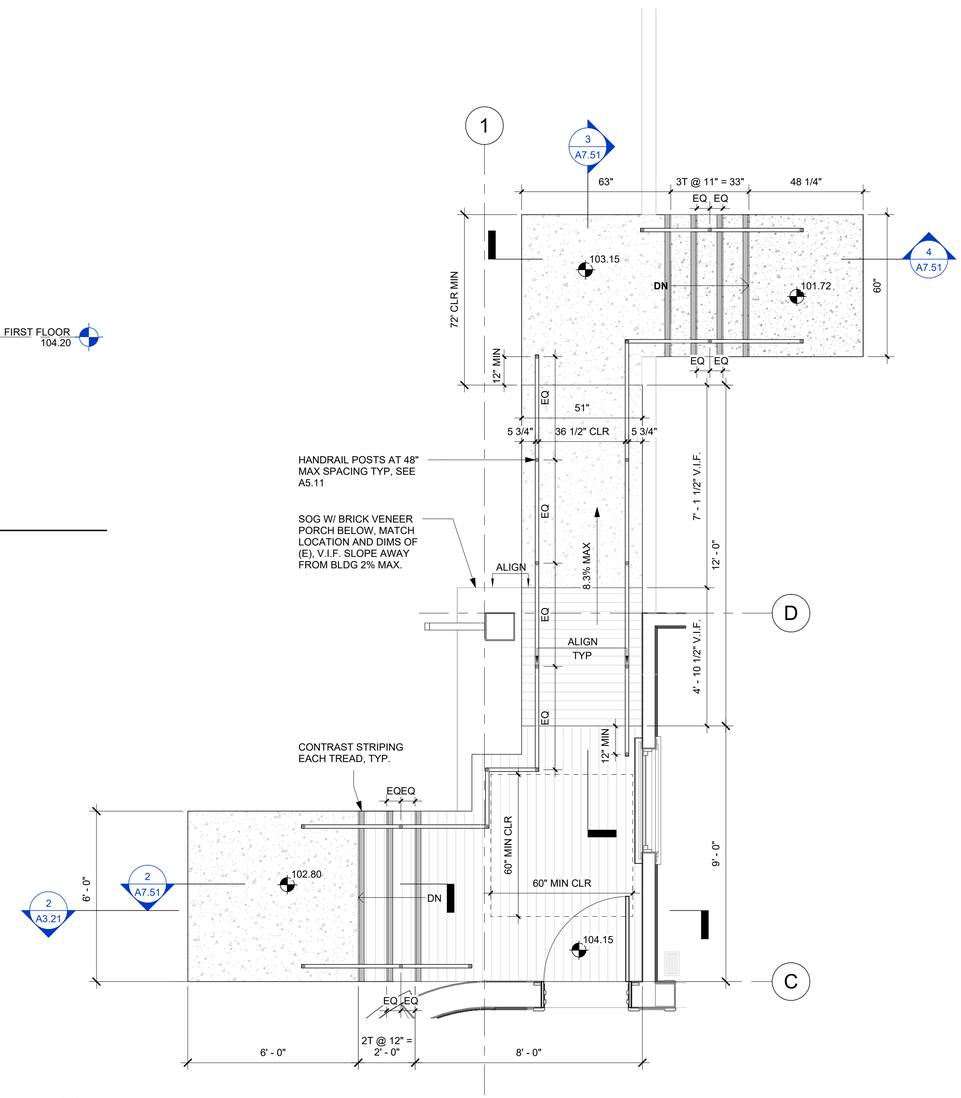

1 ENLARGED PLAN - NORTH ENTRY
3/8" = 1'-0"

CLIENT

GENERAL SERVICES AGENCY
GSA
COUNTY OF ALAMEDA

ALAMEDA COUNTY

NOTE: If this drawing is not 22"x34" it has been revised from its original size and the scales noted on drawing/details are no longer applicable.

© 2022 Shah Kawasaki Architects

Revision Number	DATE	ISSUE DESCRIPTION
	09/03/2026	PERMIT SET

Project

WHITECOTTON COTTAGE REHABILITATION

15400 FOOTHILL BLVD
SAN LEANDRO, CA 94578

Architect of Record

P&T

Consultant

PAGE & TURNBULL
170 MAIEN LANE, 5TH FLOOR
SAN FRANCISCO, CA

LICENSED ARCHITECT
PETER BIRMINGHAM
C23008
EX.4/30/2027
STATE OF CALIFORNIA

Drawing Title

EXTERIOR DETAILS - SITE STAIRS

Drawing No.

A7.51

SKA Project Number: 25001

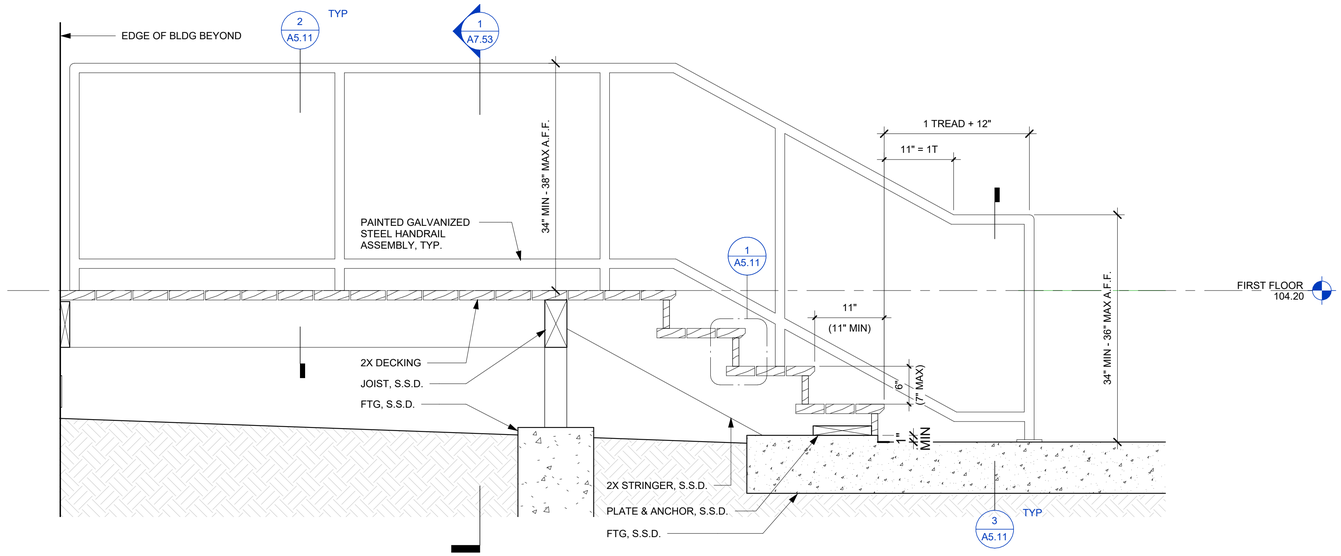

2 SECTION - SOUTH ENTRY
1" = 1'-0"

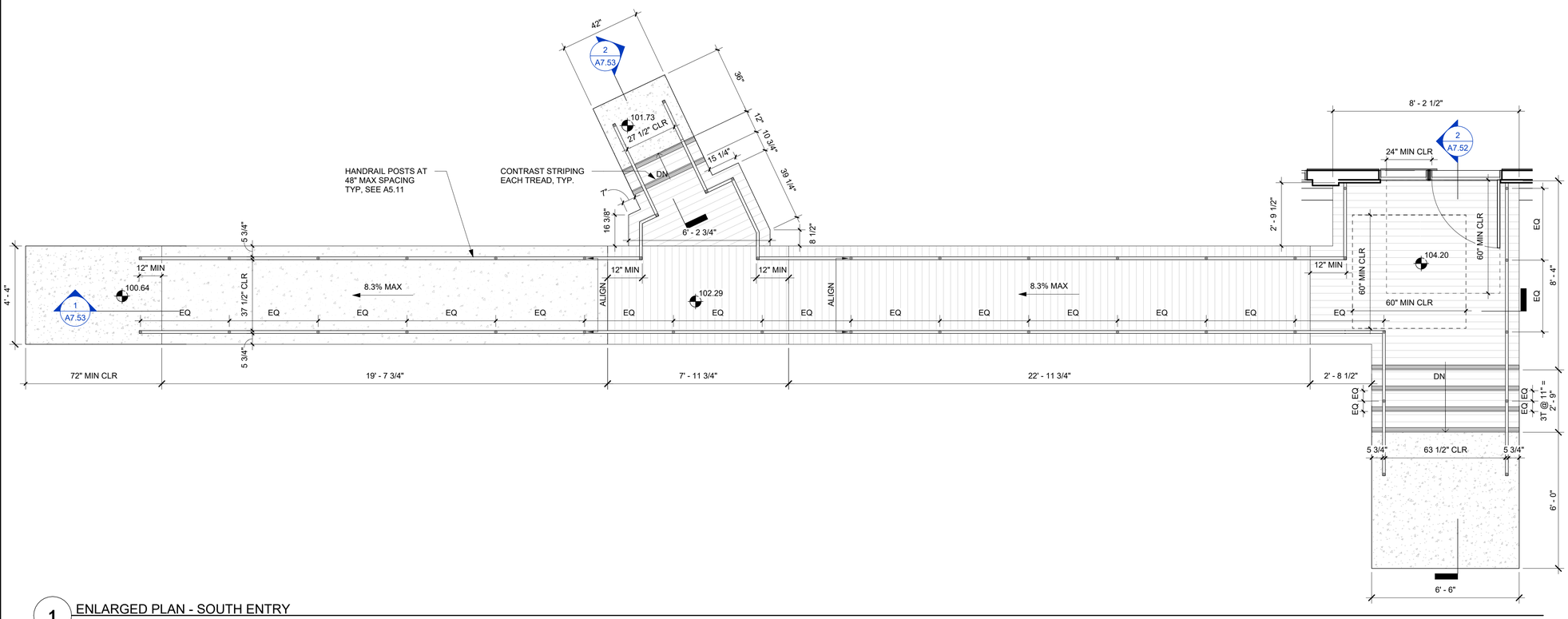

1 ENLARGED PLAN - SOUTH ENTRY
3/8" = 1'-0"

CLIENT

GENERAL SERVICES AGENCY COUNTY OF ALAMEDA GSA

ALAMEDA COUNTY

NOTE: If this drawing is not 22"x34" it has been revised from its original size and the scales noted on drawing/details are no longer applicable.

© 2022 Shah Kawasaki Architects

Revision Number	DATE	ISSUE DESCRIPTION
	09/03/2026	PERMIT SET

Project

WHITECOTTON COTTAGE REHABILITATION

15400 FOOTHILL BLVD
SAN LEANDRO, CA 94578

Architect of Record

P&T

Consultant

PAGE & TURNBULL
170 MAIEN LANE, 5TH FLOOR
SAN FRANCISCO, CA

LICENSED ARCHITECT PETER BIRMINGHAM C23016 EX.4/30/2027 STATE OF CALIFORNIA

Drawing Title

EXTERIOR DETAILS - SITE STAIRS

Drawing No.

A7.52

SKA Project Number: 25001

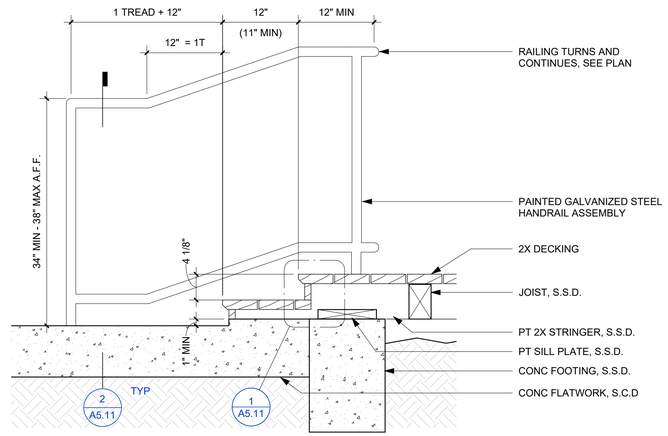

2 SECTION - SOUTH ENTRY SHORTCUT STAIR
1" = 1'-0"

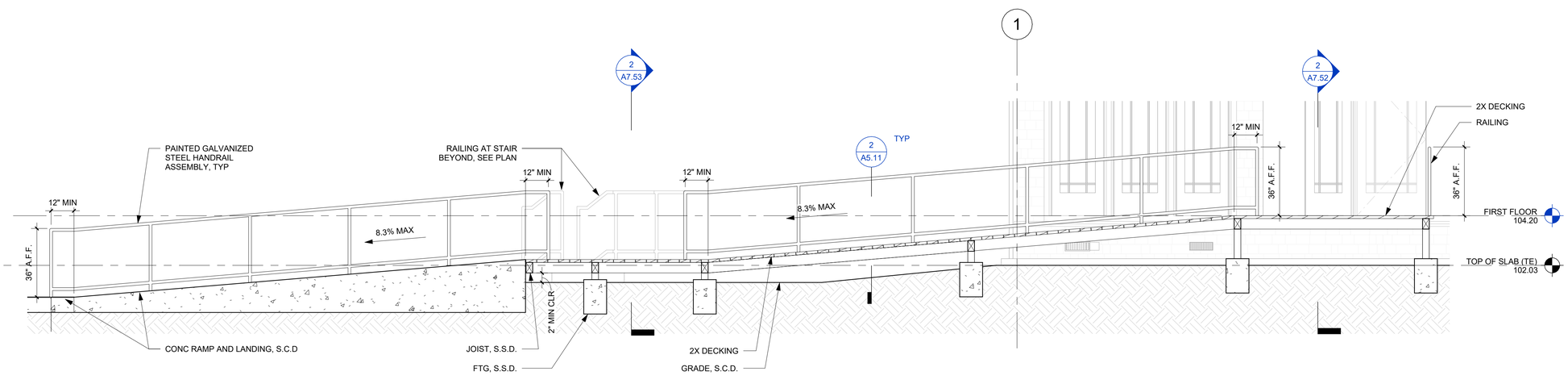

1 SECTION - SOUTH ENTRY RAMP
3/8" = 1'-0"

CLIENT

GENERAL SERVICES AGENCY
GSA
COUNTY OF ALAMEDA

ALAMEDA COUNTY

NOTE: If this drawing is not 22"x34" it has been revised from its original size and the scales noted on drawing/details are no longer applicable.

© 2022 Shah Kawasaki Architects

Revision Number	DATE	ISSUE DESCRIPTION
	09/03/2026	PERMIT SET

Project

WHITECOTTON COTTAGE REHABILITATION

15400 FOOTHILL BLVD
SAN LEANDRO, CA 94578

Architect of Record

P&T

Consultant

PAGE & TURNBULL
170 MAIEDEN LANE, 5TH FLOOR
SAN FRANCISCO, CA

LICENSED ARCHITECT
PETER BIRDINE
C23018
EX.4/30/2027
STATE OF CALIFORNIA

Drawing Title

EXTERIOR DETAILS - SITE STAIRS

Drawing No.

A7.53

SKA Project Number: 25001

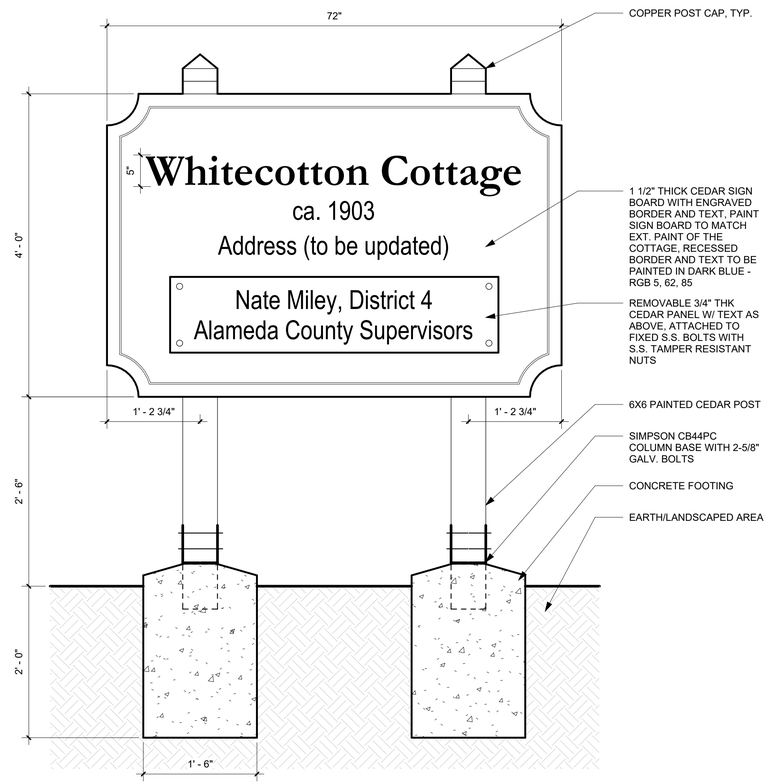

1 MONUMENT SIGN
1" = 1'-0"

CLIENT

ALAMEDA COUNTY

NOTE: If this drawing is not 22"x34" it has been revised from its original size and the scales noted on drawing/details are no longer applicable.

© 2022 Shah Kawasaki Architects

Revision Number	DATE	ISSUE DESCRIPTION
	09/03/2026	PERMIT SET

Project

WHITECOTTON COTTAGE REHABILITATION

15400 FOOTHILL BLVD
SAN LEANDRO, CA 94578

Architect of Record

P&T

Consultant

PAGE & TURNBULL
170 MAIDEN LANE, 5TH FLOOR
SAN FRANCISCO, CA

LICENSED ARCHITECT
PETER BIRUMAS
C23026
EX.4/30/2027
STATE OF CALIFORNIA

Drawing Title

EXTERIOR DETAILS - SITE

Drawing No.

A7.55

SKA Project Number: 25001

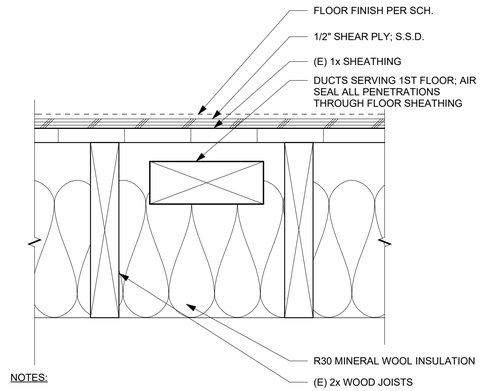

NOTES:

1. SEE A8.11 FOR PENETRATION DETAILS

6 TYP. FIRST FLOOR
3" = 1'-0"

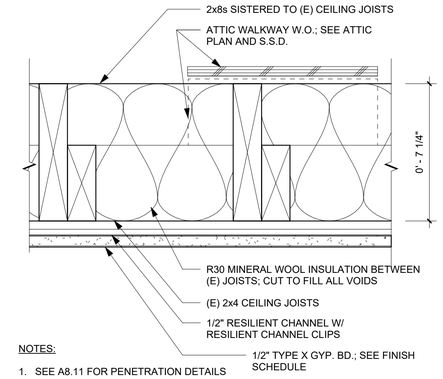

NOTES:

1. SEE A8.11 FOR PENETRATION DETAILS

3 TYP. ATTIC FLOOR - HARD LID CEILING
3" = 1'-0"

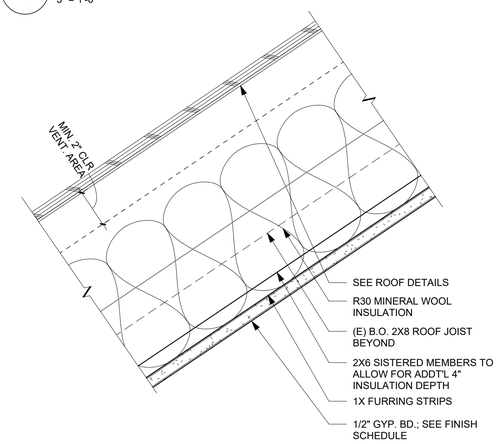

5 TYP. SLOPED ROOF - HARD LID CEILING
3" = 1'-0"

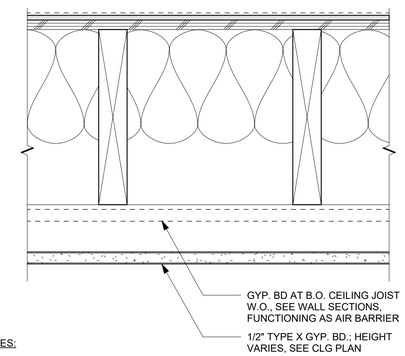

NOTES:

1. SEE 1 / A8.01 FOR TYPICAL NOTES
2. SEE 1 / A8.02 FOR TYP. CONSTRUCTION

2 TYP. SECOND FLOOR - SUSPENDED CEILING
3" = 1'-0"

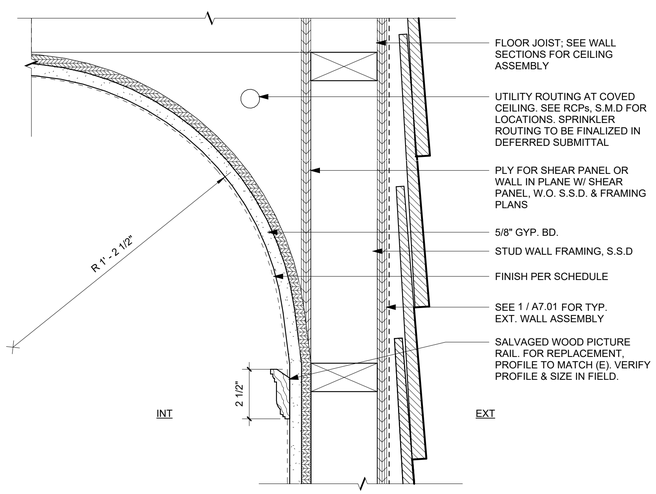

NOTE:

1. S.S.D. FOR SHEAR PANEL LOCATIONS AND NAILING SCHEDULE

10 TYP. INT. COVE CEILING - SECTION
3" = 1'-0"

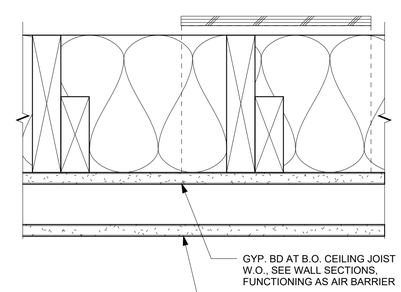

NOTES:

1. SEE 3 / A8.01 FOR TYPICAL NOTES
2. SEE 1 / A8.02 FOR TYP. CONSTRUCTION

4 TYP. ATTIC FLOOR - SUSPENDED CEILING
3" = 1'-0"

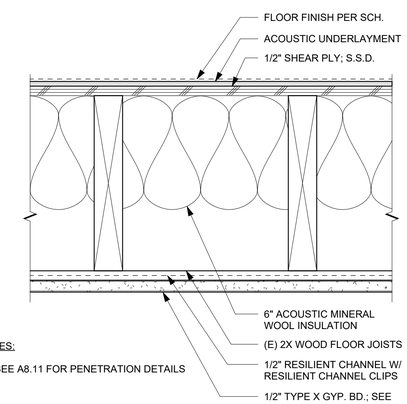

NOTES:

1. SEE A8.11 FOR PENETRATION DETAILS

1 TYP. SECOND FLOOR - HARD LID CEILING
3" = 1'-0"

CLIENT

GENERAL SERVICES AGENCY COUNTY OF ALAMEDA GSA

ALAMEDA COUNTY

NOTE: If this drawing is not 22"x34" it has been revised from its original size and the scales noted on drawing/details are no longer applicable.

© 2022 Shah Kawasaki Architects

Revision Number	DATE	ISSUE DESCRIPTION
	09/03/2026	PERMIT SET

Project

WHITECOTTON COTTAGE REHABILITATION

15400 FOOTHILL BLVD
SAN LEANDRO, CA 94578

Architect of Record

P&T

Consultant

PAGE & TURNBULL
170 MAIDEN LANE, 5TH FLOOR
SAN FRANCISCO, CA

LICENSED ARCHITECT
PETER BIRDINE
C23018
EX. 4/30/2027
STATE OF CALIFORNIA

Drawing Title

INTERIOR DETAILS - FLOOR/CEILING ASSEMBLIES

Drawing No.

A8.01

SKA Project Number: 25001

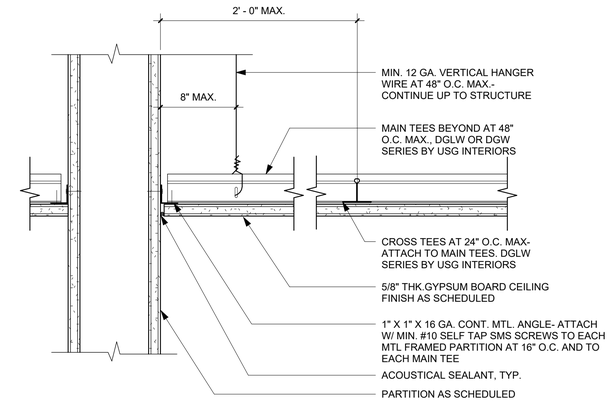

3 SUSPENDED GYPSUM BOARD CEILING @ FULL HEIGHT WALL
3" = 1'-0"

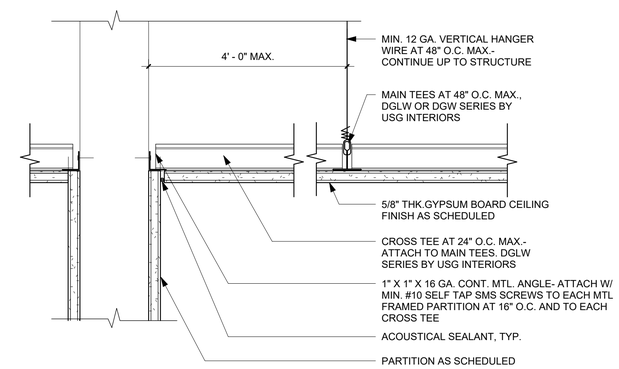

2 SUSPENDED GYPSUM BOARD CEILING @ PARTIAL HEIGHT WALL
3" = 1'-0"

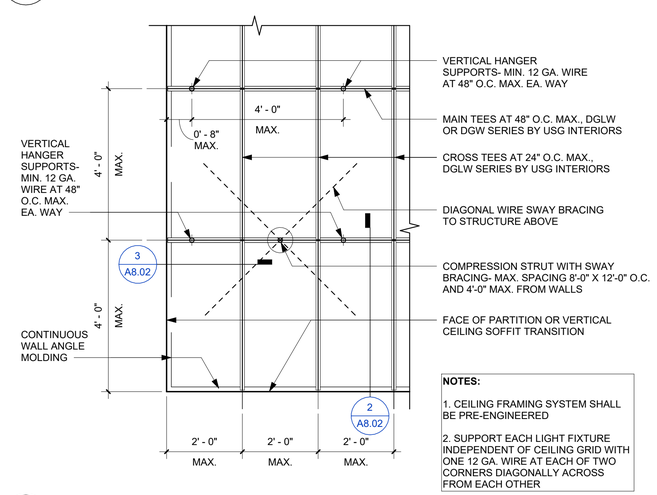

NOTES:

1. CEILING FRAMING SYSTEM SHALL BE PRE-ENGINEERED

2. SUPPORT EACH LIGHT FIXTURE INDEPENDENT OF CEILING GRID WITH ONE 12 GA. WIRE AT EACH OF TWO CORNERS DIAGONALLY ACROSS FROM EACH OTHER

1 SUSPENDED GYPSUM CEILING PLAN
1/2" = 1'-0"

CLIENT

ALAMEDA COUNTY

NOTE: If this drawing is not 22"x34" it has been revised from its original size and the scales noted on drawing/details are no longer applicable.

© 2022 Shah Kawasaki Architects

Revision Number	DATE	ISSUE DESCRIPTION
	09/03/2026	PERMIT SET

Project

WHITECOTTON COTTAGE REHABILITATION

15400 FOOTHILL BLVD
SAN LEANDRO, CA 94578

Architect of Record

P&T

Consultant

PAGE & TURNBULL
170 MAIDEN LANE, 5TH FLOOR
SAN FRANCISCO, CA

LICENSED ARCHITECT
PETER BITARIDIS
C23018
EX.4/30/2027
STATE OF CALIFORNIA

Drawing Title

INTERIOR DETAILS - CEILING

Drawing No.

A8.02

SKA Project Number: 25001

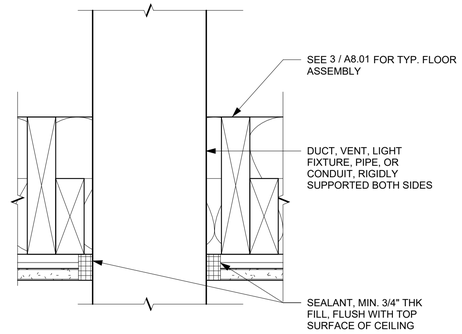

9 FLOOR PENETRATION - ATTIC FLOOR (UNRATED)
3" = 1'-0"

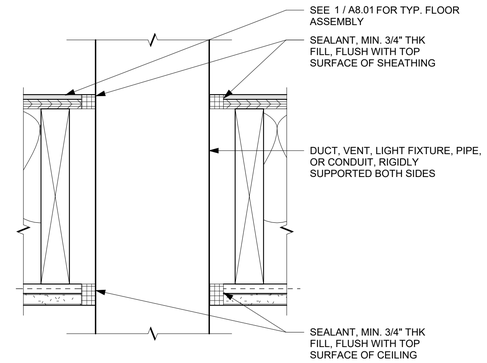

6 FLOOR PENETRATION - 2ND FLOOR (UNRATED)
3" = 1'-0"

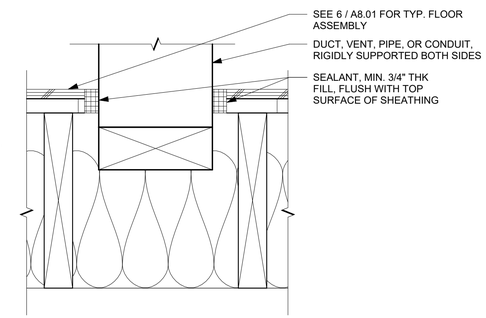

3 FLOOR PENETRATION - 1ST FLOOR (UNRATED)
3" = 1'-0"

8 CLG PENETRATION - RECESSED LAMP (UNRATED)
3" = 1'-0"

NOTES:

1. APPLICABLE AT ALL SOUND-RATED CONSTRUCTION & CHIMNEY PENETRATIONS
2. AT MULTIPLE PIPE OR CONDUIT PENETRATION THROUGH SOUND-RATED CONSTRUCTION, FILL VOID WITH SAFING INSULATION AND SEAL BOTH ENDS WITH EXPANDING FIRE FOAM SEALANT

5 WALL PENETRATION - PIPE - TYP (UNRATED)
3" = 1'-0"

NOTES:

1. APPLICABLE AT ALL SOUND-RATED CONSTRUCTION & CHIMNEY PENETRATIONS

2 WALL PENETRATION - DUCT - TYP (UNRATED)
3" = 1'-0"

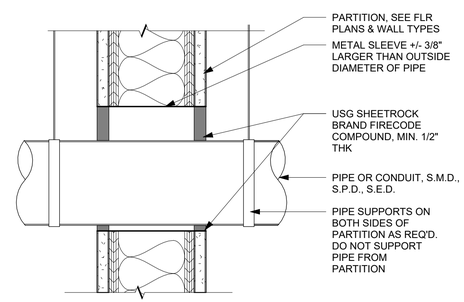

UL SYSTEM #W-L-1039
1-HR. FIRESTOP (1 HR REQ'D)

4 WALL PENETRATION - PIPE - FIRESTOP
3" = 1'-0"

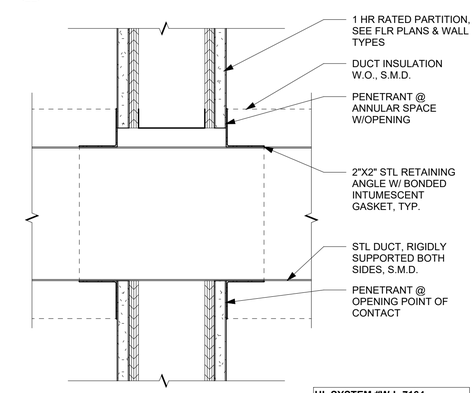

UL SYSTEM #W-L-7164
2-HR. FIRESTOP (1 HR REQ'D)

1 WALL PENETRATION - DUCT - FIRESTOP
3" = 1'-0"

CLIENT

GENERAL SERVICES AGENCY COUNTY OF ALAMEDA GSA

ALAMEDA COUNTY

NOTE: If this drawing is not 22"x34" it has been revised from its original size and the scales noted on drawing/details are no longer applicable.

© 2022 Shah Kawasaki Architects

Revision Number	DATE	ISSUE DESCRIPTION
	09/03/2026	PERMIT SET

Project

WHITECOTTON COTTAGE REHABILITATION

15400 FOOTHILL BLVD
SAN LEANDRO, CA 94578

Architect of Record

P&T

Consultant

PAGE & TURNBULL
170 MAIDEN LANE, 5TH FLOOR
SAN FRANCISCO, CA

LICENSED ARCHITECT PETER BIRUMAS C23026 EX.4/30/2027 STATE OF CALIFORNIA

Drawing Title

INTERIOR DETAILS - PENETRATIONS

Drawing No.

A8.11

SKA Project Number: 25001

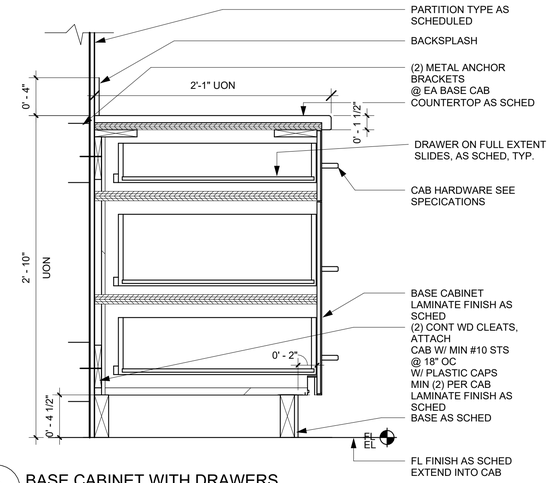

2 BASE CABINET WITH DRAWERS
1 1/2" = 1'-0"

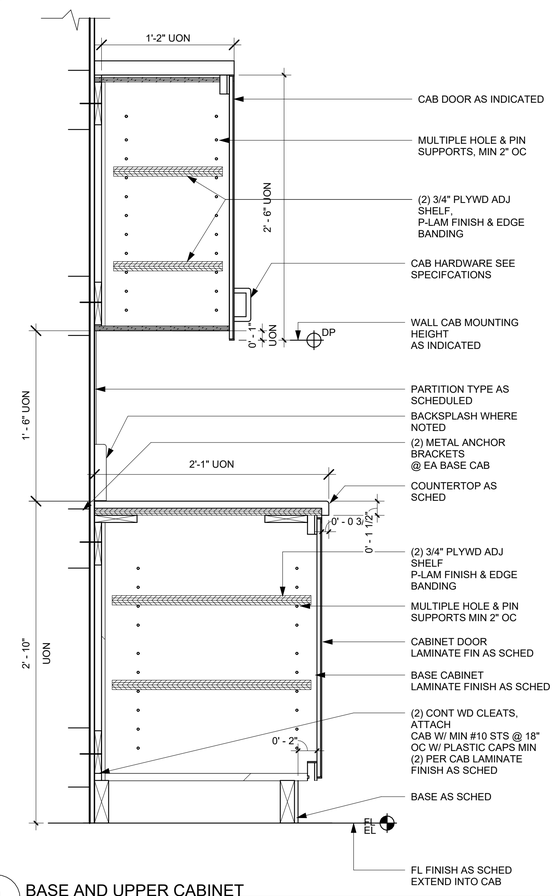

1 BASE AND UPPER CABINET
1 1/2" = 1'-0"

CLIENT

GENERAL SERVICES AGENCY COUNTY OF ALAMEDA GSA

ALAMEDA COUNTY

NOTE: If this drawing is not 22"x34" it has been revised from its original size and the scales noted on drawing/details are no longer applicable.

© 2022 Shah Kawasaki Architects

Revision Number	DATE	ISSUE DESCRIPTION
	09/03/2026	PERMIT SET

Project

WHITECOTTON COTTAGE REHABILITATION

15400 FOOTHILL BLVD
SAN LEANDRO, CA 94578

Architect of Record

P&T

Consultant

PAGE & TURNBULL
170 MAIDEN LANE, 5TH FLOOR
SAN FRANCISCO, CA

LICENSED ARCHITECT PETER BIRKHOLZ C23100 EX:4/30/2027 STATE OF CALIFORNIA

Drawing Title

INTERIOR DETAILS - CASEWORK

Drawing No.

A8.41

SKA Project Number: 25001

GENERAL NOTES:

I. GENERAL

1. MATERIALS AND WORKMANSHIP TO CONFORM WITH THE 2025 EDITION OF THE CALIFORNIA BUILDING CODE AND THE REQUIREMENTS OF THE CONTRACT DOCUMENTS. STRUCUTRAL DESIGN CONFORMS WITH THE 2025 EDITION OF THE CALIFORNIA HISTORICAL BUILDING CODE.
2. THESE GENERAL NOTES SUPPLEMENT THE REQUIREMENTS OF THE PROJECT SPECIFICATIONS. IN CASE OF CONFLICT BETWEEN THE PLANS AND SPECIFICATIONS, CONTACT THE ARCHITECT.
3. DRAWINGS INDICATE GENERAL AND TYPICAL DETAILS OF CONSTRUCTION. WHERE CONDITIONS ARE NOT SPECIFICALLY INDICATED BUT ARE OF SIMILAR CHARACTER TO DETAILS SHOWN, USE SIMILAR DETAILS OF CONSTRUCTION, SUBJECT TO REVIEW BY THE ARCHITECT.
4. DETAILS ON SHEETS TITLED "TYPICAL DETAILS" APPLY TO SITUATIONS OCCURRING ON THE PROJECT THAT ARE THE SAME OR SIMILAR TO THOSE SPECIFICALLY REFERENCED. SUCH DETAILS ARE NOT NOTED AT EACH LOCATION THAT THEY OCCUR.
5. DO NOT SCALE THE DRAWINGS.
6. PROVIDE MEASURES NECESSARY TO PROTECT THE STRUCTURE DURING CONSTRUCTION. SUCH MEASURES INCLUDE, BUT MAY NOT BE LIMITED TO, BRACING AND SHORING FOR LOADS DURING CONSTRUCTION. RETAIN A REGISTERED CIVIL ENGINEER WHO IS PROPERLY QUALIFIED TO DESIGN BRACING, SHORING, ETC. VISITS TO THE SITE BY THE ARCHITECT, OWNER, ENGINEER. WILL NOT INCLUDE OBSERVATION OF THE ABOVE NOTED ITEMS.
7. INFORMATION SHOWN ON THE DRAWINGS RELATED TO EXISTING CONDITIONS REPRESENTS THE PRESENT KNOWLEDGE, BUT WITHOUT GUARANTEE OF ACCURACY. REPORT CONDITIONS THAT CONFLICT WITH THE CONTRACT DOCUMENTS TO THE ARCHITECT. DO NOT DEVIATE FROM THE CONTRACT DOCUMENTS WITHOUT WRITTEN DIRECTION FROM THE ARCHITECT.
8. REFER TO ARCHITECTURAL DRAWINGS FOR SIZE AND LOCATION OF FLOOR, ROOF AND WALL OPENINGS NOT SHOWN ON THE STRUCTURAL DRAWINGS. COORDINATE THE SIZE AND LOCATION OF OPENINGS ASSOCIATED WITH, BUT NOT LIMITED TO, ELECTRICAL, MECHANICAL AND PLUMBING TRADES. SUBMIT FINAL SIZING AND LOCATION REQUIREMENTS OF OPENINGS TO THE ARCHITECT FOR REVIEW.

II. FOUNDATION AND SITE WORK

1. THE DESIGN OF THE FOUNDATION SYSTEM IS BASED UPON THE CRITERIA AND RECOMMENDATIONS CONTAINED IN THE GEOTECHNICAL INVESTIGATION REPORT ENTITLED GEOTECHNICAL INVESTIGATION PROPOSED REHABILITATION WHITECOTTON COTTAGE SAN LEANDRO, CALIFORNIA, JULY 8, 2026
2. THE GEOTECHNICAL REPORT IS PART OF THE CONSTRUCTION DOCUMENTS.
3.
4. CONTRACTOR SHALL KEEP A HARD COPY OF THE REPORT ON SITE DURING CONSTRUCTION
5. LOCATE AND PROTECT EXISTING UTILITIES TO REMAIN DURING AND/OR AFTER CONSTRUCTION.
6. REMOVE ABANDONED FOOTINGS, UTILITIES, ETC. WHICH INTERFERE WITH NEW CONSTRUCTION, UNLESS OTHERWISE INDICATED.
7. THE CONTRACTOR IS SOLELY RESPONSIBLE FOR EXCAVATION PROCEDURES INCLUDING LAGGING, SHORING, UNDERPINNING AND PROTECTION OF EXISTING CONSTRUCTION.
8. EXCAVATIONS FOR FOUNDATIONS MUST BE ACCEPTED BY THE GEOTECHNICAL ENGINEER PRIOR TO PLACING REINFORCING AND CONCRETE. NOTIFY THE GEOTECHNICAL ENGINEER WHEN EXCAVATIONS ARE READY FOR INSPECTION.
9. PLACE BACKFILL BEHIND RETAINING WALLS AFTER CONCRETE OR MASONRY HAS ATTAINED FULL DESIGN STRENGTH. BRACE BUILDING AND PIT WALLS BELOW GRADE FROM LATERAL LOADS UNTIL ATTACHED FLOORS AND SLABS ON GRADE ARE COMPLETE AND HAVE ATTAINED FULL DESIGN STRENGTH.
10. MECHANICALLY COMPACT EXCAVATION BACKFILLS IN LAYERS. PROVIDE THE FOLLOWING MINIMUM COMPACTION IN ACCORDANCE WITH THE ASTM D1557 TEST METHOD:

LOCATION	MAXIMUM DRY DENSITY
TRENCH AND WALL BACKFILL	90%
UPPER 6" OF SOIL BENEATH FILL	90%
FILL BENEATH SLAB ON GRADE	90%
FILL BENEATH FOOTINGS	95%
OTHER	90%

III. REINFORCING STEEL

1. REINFORCING TO CONFORM TO THE FOLLOWING, UNLESS OTHERWISE NOTED:

REINFORCING STEEL	TYPE
#5 AND SMALLER	ASTM A615, 60 KSI
#6 AND LARGER & BARS TO BE WELDED	ASTM A706, 60 KSI
HIGH STRENGTH REINF WHERE NOTED ON DWGS	ASTM A615, 75 KSI
1/2 INCH DIAMETER LOW RELAXATION SEVEN-WIRE POST-TENSIONING STRAND	ASTM A416, 270 KSI
WELDED STEEL WIRE FABRIC	ASTM A185, 70 KSI
SMOOTH DOWELS IN SLAB ON GRADE	ASTM A36, 36 KSI

2. MECHANICAL COUPLERS: TYPE 2 PER ACI-318, UNLESS OTHERWISE NOTED.
3. TERMINATE REINFORCING STEEL IN STANDARD HOOKS, UNLESS OTHERWISE SHOWN.

IV. CAST-IN-PLACE CONCRETE

1. CONCRETE IS REINFORCED AND CAST-IN-PLACE UNLESS OTHERWISE NOTED. WHERE REINFORCING IS NOT SPECIFICALLY SHOWN OR WHERE DETAILS ARE NOT GIVEN, PROVIDE REINFORCING SIMILAR TO THAT SHOWN FOR SIMILAR CONDITIONS, SUBJECT TO REVIEW BY THE OWNER'S REPRESENTATIVE. SUBSTITUTION OF SHOTCRETE FOR CAST-IN-PLACE CONCRETE IS NOT ACCEPTABLE.
2. ROUGHEN CONCRETE SURFACES OF CONSTRUCTION JOINTS TO 1/4 INCH AMPLITUDE AND CLEAN OF LAITANCE, FOREIGN MATTER, AND LOOSE PARTICLES AT THE FOLLOWING LOCATIONS: WHERE CAST AGAINST EXISTING CONCRETE; AT WALL, COLUMN AND BEAM JOINTS; WHERE CAST EXISTING MASONRY/STONE, ETC.
3. REFER TO ARCHITECTURAL AND MECHANICAL DRAWINGS FOR LOCATIONS OF ADDITIONAL CONCRETE CURBS AND HOUSEKEEPING PADS NOT SHOWN.
4. CONCRETE CLEAR COVER TO REINFORCING BARS IS AS FOLLOWS, UNLESS OTHERWISE NOTED:

LOCATION	CLEAR COVER
CONCRETE PLACED AGAINST EARTH	3 INCHES
FORMED SURFACES EXPOSED TO WEATHER OR IN CONTACT WITH EARTH:	
#6 BARS AND LARGER	2 INCHES
#5 BARS AND SMALLER	1 1/2 INCHES
SLABS ON GRADE (TOP CLEARANCE)	1 1/2 INCHES
BEAMS, GIRDERS AND COLUMNS NOT EXPOSED TO WEATHER OR EARTH:	1 1/2 INCHES
WALL OR SLAB SURFACES NOT EXPOSED TO WEATHER OR EARTH:	
#5 & SMALLER	3/4 INCH
#6 & #7	1 INCH
#8, #9, #10 & #11	1 1/2 INCHES
#14 & #18	2 1/2 INCHES

5. CONCRETE TYPES:
   A. TYPE A: FOUNDATIONS, MISC CURBS, HOUSEKEEPING PADS, ETC:
      a. 28-DAY STRENGTH: F'C = 4,000 PSI
      b. TYPE: NORMAL WEIGHT
7. CONCRETE EXPOSURE CLASSES: ALL CONCRETE TO BE EXPOSURE CLASS F0, S0, W0 AND C0 PER ACI 318 UNLESS OTHERWISE NOTED. CONCRETE MIXES TO ADDITIONALLY COMPLY WITH ACI 318 TABLES 19.3.2.1 AND 19.3.3.1.
8. NON-SHRINK GROUT: ASTM C1107, WITH MINIMUM COMPRESSIVE STRENGTH OF 8,000 PSI.

V. MECHANICAL ANCHORS

1. EXPANSION OR WEDGE ANCHORS INTO CONCRETE: HILTI KB-TZ2 (ICC-ESR-4266), SIMPSON STRONG-BOLT 2 (ICC-ESR-3037) OR DEWALT POWER-STUD+ SD2 (ICC-ESR-2502), UNLESS SPECIFICALLY NOTED OTHERWISE.
2. HEAVY DUTY SLEEVE ANCHORS INTO CONCRETE: HILTI HSL-3 ANCHORS (ICC-ESR-1545) OR DEWALT POWER-BOLT+ (ICC-ESR-3260).
3. UNDERCUT ANCHORS: HILTI HDA (ICC-ESR-1546)[, SIMPSON STRONG-TIE TORQ-CUT (ICC-ESR-2705); DEWALT ATOMIC+ UNDERCUT (ICC-ESR-3067).]
4. SCREW ANCHORS: HILTI HUS-EZ (ICC-ESR-3027), SIMPSON STRONG-TIE TITEN-HD (ICC-ESR-2713), OR DEWALT SCREW-BOLT + (ICC-ESR-3889).
5. ANCHORS INTO CMU: [HILTI KB-3 (ICC-ESR-1385); HILTI KB-TZ (ICC-ESR-3785)], [SIMPSON STRONG-TIE WEDGE-ALL (ICC-ESR-1396); SIMPSON STRONG-TIE TITEN-HD (ICC-ESR-1056)], OR DEWALT POWER STUD+ SD1 (ICC-ESR-9266).
6. ALL EMBEDMENT DEPTHS NOTED ON DRAWINGS ARE EFFECTIVE EMBEDMENT PER MANUFACTURER.
7. INSTALL ANCHORS IN ACCORDANCE WITH LATEST ICC-ESR REPORT AND MANUFACTURER INSTRUCTIONS.
8. PROVIDE STAINLESS STEEL FASTENERS FOR EXTERIOR USE OR WHEN EXPOSED TO WEATHER. PROVIDE GALVANIZED CARBON STEEL ANCHORS AT OTHER LOCATIONS, UNLESS OTHERWISE NOTED.
9. IF REINFORCEMENT IS ENCOUNTERED DURING DRILLING, ABANDON AND SHIFT THE HOLE LOCATION TO AVOID THE REINFORCEMENT. PROVIDE A MINIMUM OF 2 ANCHOR DIAMETERS OR 1 INCH, WHICHEVER IS LARGER, OF SOUND CONCRETE BETWEEN THE ANCHOR AND THE ABANDONED HOLE. FILL THE ABANDONED HOLE WITH NON-SHRINK GROUT. IF THE ANCHOR MAY NOT BE SHIFTED AS NOTED ABOVE, THE ENGINEER WILL DETERMINE A NEW LOCATION.
10. LOCATE REINFORCEMENT AND CONFIRM FINAL ANCHOR LOCATIONS PRIOR TO FABRICATING PLATES, MEMBERS, OR OTHER STEEL ASSEMBLIES ATTACHED WITH MECHANICAL ANCHORS.
11. ALL ANCHORS REQUIRE SPECIAL INSPECTION BY OWNER'S TESTING AND INSPECTION AGENCY IN ACCORDANCE WITH THE ICC REPORTS AND THE CODE.
12. WEDGE, SLEEVE AND UNDERCUT ANCHORS REQUIRE PROOF TESTING. TEST 20% OF ANCHORS TO THE MANUFACTURER'S RECOMMENDED INSTALLATION TORQUE OR RECOMMENDED TORQUE IN ICC-ESR REPORT.

VI. ADHESIVE ANCHORS AND DOWELS

1. ANCHORS AND DOWELS INSTALLED INTO CONCRETE: HILTI HIT-RE-500-V3 (ICC-ESR-3814), SIMPSON STRONG-TIE SET - 3G (ICC-ESR-4057) OR DEWALT PURE 110+ (ICC ESR 3298). ALL EMBEDMENT DEPTHS NOTED ON DRAWINGS ARE EFFECTIVE EMBEDMENT PER MANUFACTURER.
2. ANCHORS AND DOWELS INSTALLED INTO CONCRETE MASONRY UNITS (CMU): HILTI HIT-HY 270 (ICC-ESR-4143), SIMPSON STRONG-TIE SET-XP (IAPMO UES ER-265) OR DEWALT AC100+ GOLD (ICC-ESR-3200).
3. ALL ANCHORS REQUIRE SPECIAL INSPECTION BY THE OWNER'S TESTING AND INSPECTION AGENCY IN ACCORDANCE WITH THE ICC-ESR REPORTS AND THE CODE.
4. THE TESTING LABORATORY IS TO PERFORM TENSION TESTS ON 20% OF ANCHORS AND DOWELS INSTALLED INTO CONCRETE TO THE FOLLOWING TEST LOADS:

ROD DIA OR BAR SIZE	CMIN	TEST LOAD (LBS)	
		ANCHOR LOCATED > CMIN & < 12" FROM EDGE	ANCHOR LOCATED > 12" FROM EDGE
3/8", #3	2"	1,300	1,600
1/2", #4	2 1/2"	2,000	3,400
5/8", #5	3"	2,800	4,200
3/4", #6	4"	3,700	5,000
7/8", #7	4 1/2"	3,700	5,000
1", #8	5"	4,800	6,100

5. ANCHORS AND DOWELS INSTALLED INTO UNREINFORCED BRICK MASONRY (URM): HILTI-HY 270 (ICC-ESR-4144), SIMPSON STRONG-TIE SET (ICC-ESR-1772), OR DEWALT AC100+ GOLD (ICC-ESR-4105). USE SCREENS AS SPECIFIED BY THE MANUFACTURER.
6. THE TESTING LABORATORY IS TO PERFORM TENSION TESTS ON [10%, 25%] OF ANCHORS AND DOWELS TO THE FOLLOWING TEST LOADS:

ROD DIA OR BAR SIZE	EMBEDMENT	TEST LOAD	BASE MATERIAL
5/8"	12"	3000 #	URM
3/4"	12"	3000 #	URM

7. ANCHORS: ASTM A36 THREADED RODS WITH ASTM A563 GRADE A NUTS AND ANSI B18.22.1 TYPE A WASHERS, UNLESS OTHERWISE NOTED. ANCHORS DESIGNATED AS ASTM A193 GRADE B7 THREADED RODS TO USE ASTM A563 GRADE DH HEAVY HEX NUTS AND ASTM F436 WASHERS.
8. REBAR DOWELS: ASTM A615 GRADE 60 REINFORCING STEEL.
9. INSTALL ANCHORS IN ACCORDANCE WITH LATEST ICC-ESR REPORT AND MANUFACTURER INSTRUCTIONS.
10. IF REINFORCEMENT IS ENCOUNTERED DURING DRILLING, ABANDON AND SHIFT THE HOLE LOCATION TO AVOID THE REINFORCEMENT. PROVIDE A MINIMUM OF 2 ANCHOR DIAMETERS OR 1 INCH, WHICHEVER IS LARGER, OF SOUND CONCRETE BETWEEN THE DOWEL AND THE ABANDONED HOLE. FILL THE ABANDONED HOLE WITH NON-SHRINK GROUT. IF THE ANCHOR OR DOWEL MAY NOT BE SHIFTED AS NOTED ABOVE, THE ENGINEER WILL DETERMINE A NEW LOCATION.
11. LOCATE REINFORCEMENT AND CONFIRM FINAL ANCHOR LOCATIONS PRIOR TO FABRICATING PLATES, MEMBERS, OR OTHER STEEL ASSEMBLIES ATTACHED WITH ADHESIVE ANCHORS.

CLIENT

GENERAL SERVICES AGENCY GSA COUNTY OF ALAMEDA

ALAMEDA COUNTY

NOTE: If this drawing is not 22"x34" it has been revised from its original size and the scales noted on drawing/details are no longer applicable.

© 2022 Shah Kawasaki Architects

Revision Number	DATE	ISSUE DESCRIPTION
1	09/03/2026	PERMIT SET

Project

WHITECOTTON COTTAGE REHABILITATION

15400 FOOTHILL BLVD
SAN LEANDRO, CA 94578

Architect of Record

P&T

Consultant

Degenkolb

DEGENKOLB ENGINEERS
601 12th Street, Suite 400
Oakland, CA 94607
510.272.9040 PHONE
www.degenkolb.com

REGISTERED PROFESSIONAL ENGINEER
JAY C. YIN
No. 4521
STRUCTURAL
STATE OF CALIFORNIA
9/2/26

Drawing Title

STRUCTURAL GENERAL NOTES

Drawing No.

S0.01

SKA Project Number: C3C78027.01

GENERAL NOTES CONTINUED:

VII. ROUGH CARPENTRY

1. FRAMING LUMBER: DOUGLAS FIR (COAST REGION) GRADED AND MARKED IN ACCORDANCE WITH THE STANDARD GRADING RULES NO. 17 OF THE WEST COAST LUMBER INSPECTION BUREAU (W.C.L.I.B.) OR WESTERN LUMBER GRADING RULES, OF THE WESTERN WOOD PRODUCTS ASSOCIATION (W.W.P.A.). USE LUMBER OF THE FOLLOWING GRADES:

MEMBER	MOISTURE CONTENT	WOOD/GRADE
SILLS	19%	DF #1 PRESSURE OR PRESERVATIVE TREATED OR FOUNDATION GRADE REDWOOD
STUDS	19%	DF #2
JOISTS, PLANKS AND PLATES	15%	DF #1
BEAMS, 5" & WIDER	GREEN	DF SELECT STRUCTURAL
BEAMS, 4" & NARROWER	GREEN	DF #1
POSTS, 6X6 & LARGER	GREEN	DF SELECT STRUCTURAL
POSTS, 4X6 & SMALLER	19%	DF #1
SLEEPER	19%	DF #1 PRESSURE OR PRESERVATIVE TREATED
BLOCKING & BRIDGING	15%	DF #2
PLYWOOD BLOCKING	19%	DF #1
BACKING, STRIPPING AND FURRING	19%	CONSTRUCTION

2. WOOD FRAMING SIZES ON DRAWINGS ARE STATED IN TERMS OF STANDARD NOMINAL SIZES

3. PANEL SHEATHING: PROVIDE WOOD STRUCTURAL PANELS WITH THE APPROPRIATETRADEMARK OF APA-THE ENGINEERED WOOD ASSOCIATION AND MEET THE REQUIREMENTS OF THE VOLUNTARY PRODUCT STANDARD PS-1 OR PS-2 AND APA PRP-108 PERFORMANCE STANDARD, AND THE FOLLOWING UNLESS OTHERWISE NOTED:
   - A. EXPOSURE PER SPECIFICATIONS
   - B. GRADE PER SPECIFICATIONS
   - C. ROOF/FLOOR SPAN RATING PER SPECIFICATIONS
   - D. PLYWOOD PANELS TO BE 5-PLY MINIMUM, EXCEPT 3/8" PANELS TO BE 3-PLY MINIMUM.

4. ROUGH HARDWARE:
   - A. NAILS: COMMON WIRE NAILS, STANDARD LENGTHS UON. USE HOT-DIPPED ZINC-COATED GALVANIZED NAILS FOR EXTERIOR INSTALLATIONS AND WHEN PENETRATING PRESSURE TREATED OR FIRE-RETARDANT LUMBER.
   - B. BOLTS AND THREADED RODS: ASTM A307, SQUARE OR HEXAGONAL HEAD MACHINE BOLTS WITH ASTM A563 NUTS. USE [MALLEABLE IRON WASHERS; ASTM F844 WASHERS] UNDER HEAD AND NUT WHEN IN CONTACT WITH WOOD. AT SILL PLATES USE 3"X3"X1/4" MINIMUM PLATE WASHERS.
   - C. LAG SCREWS: ASTM A307. USE ASTM F844 WASHERS UNDER HEAD WHEN IN CONTACT WITH WOOD.
   - D. SCREWS: ASTM A307, ANSI/ASME STANDARD B18.6.1. USE CADMIUM-PLATED PAN OR ROUND HEADED WOOD SCREWS AT STEEL TO WOOD AND WOOD TO WOOD CONNECTIONS.
   - E. MISCELLANEOUS STEEL: ASTM A36.
   - F. BOLTS, NUTS, WASHERS, STRAPS AND OTHER HARDWARE EXPOSED TO THE WEATHER TO BE HOT-DIPPED GALVANIZED OR STAINLESS STEEL.
   - G. FRAMING CLIPS, SHEET METAL STRAPS, ETC.: SIMPSON STRONG-TIE. PROVIDE Z-MAX COATING WHERE ATTACHED TO PRESERVATIVE TREATED LUMBER.

5. NAILING:
   - A. PANEL SHEATHING:
     - a. AT FLOOR AND ROOF SHEATHING, USE RING SHANK NAILS WITH SHANK DIAMETER EQUAL TO SPECIFIED COMMON NAIL DIAMETER. USE SMOOTH SHANK NAILS AT WALLS.
     - b. GLUE FLOOR SHEATHING AT ALL POINTS OF CONTACT.
   - B. PROVIDE MINIMUM NAILING PER TABLE 2304.10.1 OF THE [CBC, IBC] U.O.N.

6. INSTALL SOLID BLOCKING BETWEEN JOISTS AT ENDS AND OVER SUPPORTS. PROVIDE 2 INCH BY 3 INCH CROSS BRIDGING, METAL BRIDGING, OR SOLID BLOCKING BETWEEN JOISTS IN SPANS EQUALLY SPACED 8 FEET ON CENTER MAXIMUM AND WHERE INDICATED.

VIII. SHOP FABRICATED WOOD PRODUCTS

1. MANUFACTURERS: PER SPECIFICATIONS

2. PARALLAM PSL LUMBER: 2.0 E

3. SEE SPECIFICATIONS FOR ALL OTHER REQUIREMENTS

VIII. STRUCTURAL STEEL

1. STRUCTURAL STEEL TO CONFORM TO THE FOLLOWING UNLESS OTHERWISE NOTED:

SECTIONS	TYPE
ROLLED SHAPES:	
WIDE FLANGES	ASTM A992
CHANNELS, ANGLES, & OTHER	ASTM A36
PLATES:	
COLUMN BASE PLATES	ASTM A572, GR 50
BRACE GUSSET PLATES	ASTM A572, GR 50
BEAM SHEAR CONNECTION PLATES	ASTM A572, GR 50
COLUMN CONTINUITY PLATES	ASTM A572, GR 50
BEAM STIFFENER PLATES	ASTM A36
EDGE OF DECK BENT PLATE	ASTM A36
OTHER	ASTM A572, GR 50
STEEL PIPE	ASTM A53 GRADE B
COLD FORMED STRUCTURAL TUBING (HSS)	ASTM A500 GRADE B
STAINLESS STEEL SHAPES, PLATES & BARS	ASTM A276, TYPE 304L
BOLTS	ASTM F3125: GRADE A325X, F1852X
MACHINE BOLTS	ASTM A307, GRADE A
STAINLESS STEEL BOLTS	ASTM A193 B8M, CLASS 1
ANCHOR RODS	ASTM F1554, GR55 W/ WELDABLE SUPPLEMENT S1
ALL-THREAD ROD AND THRU BOLTS	ASTM [A36;A572, GR50]
HIGH STRENGTH ALL-THREAD ROD	ASTM A193 B7, GR105
STAINLESS STEEL ALL-THREAD ROD	ASTM A193 B8M CLASS 2
HANGER ROD	ASTM A572, GR50
WELDED SHEAR STUD CONNECTORS	ASTM A108, GRADE 1015 TO1020
WELDED THREADED STUDS	ASTM A108, GRADE 1015 TO 1020
NUTS FOR BOLTS AND MACHINE BOLTS	ASTM A563
STAINLESS STEEL NUTS	ASTM A194 GR8M
HARDENED WASHERS FOR BOLTS	ASTM F436
UNHARDENED FLAT WASHERS	ASTM F844, ANSI B18.22.1
STAINLESS STEEL WASHERS	ASTM A276, TYPE 304
BEVELED WASHERS	ANSI B18.23.1

2. HOT DIP GALVANIZE IN ACCORDANCE WITH ASTM A123 AND ASTM A153 STRUCTURAL STEEL AND FASTENERS THAT ARE PERMANENTLY EXPOSED TO THE WEATHER. REPAIR GALVANIZING AFTER WELDING IN ACCORDANCE WITH ASTM A780. HOT-DIP GALVANIZE ASTM F1554 RODS IN ACCORDANCE WITH ASTM F2329.

3. STRUCTURAL STEEL AND CONNECTIONS EXPOSED TO VIEW IN THE COMPLETED BUILDING ARE DESIGNATED ARCHITECTURALLY EXPOSED STRUCTURAL STEEL (AESS), CATEGORY [AESS 1, AESS 2, AESS 3, AESS 4, AS INDICATED ON THE DRAWINGS].

4. ARC-WELDING ELECTRODES/FILLER METALS TO BE LOW HYDROGEN TYPES E7XTX, E7XTXX OR E70XXX MINIMUM AS APPLICABLE. ELECTRODES WITH CHARPY V-NOTCH TESTS VALUES OF A MINIMUM 20 FOOT-POUNDS AT 0 DEGREES FAHRENHEIT AND 40 FOOT- POUNDS AT 70 DEGREES FAHRENHEIT ARE TO BE USED AT ALL WELDS OF THE SEISMIC FORCE RESISTING SYSTEM (SFRS), WHERE DESIGNATED "DCW" ON THE DRAWINGS AND THE FOLLOWING LOCATIONS:
   - A. COMPLETE JOINT PENETRATION WELDS.
   - B. BEAM TO COLUMN MOMENT CONNECTIONS – INCLUDING FLANGE, WEB, DOUBLER PLATES, BASE PLATES, AND CONTINUITY PLATE FILLET AND PARTIAL JOINT PENETRATION WELDS.
   - C. BRACE CONNECTIONS – INCLUDING BRACE, GUSSET, BASE PLATES, BEAM STIFFENER PLATES, AND CONTINUITY PLATE FILLET AND PARTIAL JOINT PENETRATION WELDS.
   - D. COLLECTORS – SHEAR TABS, FLANGE AND WEB WELDS.

5. WHERE FIELD WELDING IS NOTED, THE DESIGNATION IS GIVEN AS A SUGGESTED CONSTRUCTION PROCEDURE ONLY.

IX. STRUCTURAL TESTS, INSPECTIONS, AND OBSERVATIONS

1. AN INDEPENDENT TESTING AGENCY AND SPECIAL INSPECTORS WILL BE RETAINED BY THE OWNER TO PERFORM TESTS AND INSPECTION.

2. THE FOLLOWING ITEMS REQUIRE TESTS AND INSPECTIONS IN ACCORDANCE WITH THE REQUIREMENTS OF THE CHAPTER "STRUCTURAL TESTS AND INSPECTIONS" OF THE APPLICABLE CODE. REQUIREMENTS FOR TESTS AND INSPECTIONS ARE IDENTIFIED IN THE SPECIFICATIONS.
   - A. REINFORCING STEEL
   - B. CAST-IN-PLACE CONCRETE
   - C. CONCRETE MASONRY
   - D. STRUCTURAL STEEL
   - E. POST-INSTALLED ANCHORS
   - F. ROUGH CARPENTRY
   - G. SHOP FABRICATED WOOD PRODUCTS

3. PROVIDE TESTS AND INSPECTIONS IN ACCORDANCE WITH THE SPECIFICATIONS.

4. NOTIFY THE ENGINEER AT SIGNIFICANT CONSTRUCTION STAGES 72 HOURS IN ADVANCE AND PROVIDE ACCESS FOR THE FOLLOWING STRUCTURAL OBSERVATIONS:
   - A. GRADE BEAMS AND PIERS
     - a. REINFORCEMENT
   - B. WOOD FRAMING
     - a. FRAMING – TRANSFER BEAMS AND POSTS
     - b. SHEAR WALLS AND HOLD-DOWNS

IX. DESIGN CRITERIA

1. APPLICABLE CODE: 2025 CALIFORNIA HISTORIC BUILDING CODE

2. FOUNDATIONS HAVE BEEN DESIGNED WITH THE FOLLOWING CRITERIA:
   - A. INDIVIDUAL SPREAD FOOTINGS:
     - a. ALLOWABLE SOIL PRESSURE FOR DL + LL = 4,000 PSF
     - b. ALLOWABLE SOIL PRESSURE FOR DL + LL + EQ = 5,333 PSF
     - c. COEFFICIENT OF FRICTION = 0.3
     - d. PASSIVE RESISTANCE = [DEFINE]
   - B. CONTINUOUS STRIP/ WALL FOOTINGS:
     - a. ALLOWABLE SOIL PRESSURE FOR DL + LL = 4,000 PSF
     - b. ALLOWABLE SOIL PRESSURE FOR DL + LL + EQ = 5,333 PSF
     - c. COEFFICIENT OF FRICTION = 0.3
     - d. PASSIVE RESISTANCE = [DEFINE]
   - C. DRILLED PIERS:
     - a. ALLOWABLE SURFACE FRICTION: 750 PSF
     - b. ALLOWABLE END BEARING: 4,000 PSF

3. GRAVITY LOADS:
   - A. DEAD LOADS - VARY BASED ON ACTUAL BUILDING AND EQUIP OPERATING WEIGHTS
   - B. LIVE LOADS:
     - a. ROOF 20 PSF (REDUCIBLE)
     - b. FLOOR 40 PSF (REDUCIBLE)
     - c. ATTIC 40 PSF

4. LATERAL/SEISMIC FORCE RESISTING SYSTEM (SFRS):
   - A. ALL LATERAL LOAD RESISTANCE AND STABILITY OF THE BUILDING IN THE COMPLETED STRUCTURE IS PROVIDED BY WOOD SHEAR WALLS IN EACH ORTHOGONAL DIRECTION (SEE PLANS FOR LOCATION AND ORIENTATION). THE DIAGONALLY SHEATHED FLOORS ACT AS DIAPHRAGMS THAT TRANSFER THE LATERAL WIND AND SEISMIC FORCES TO THE SHEAR WALLS. THE SHEAR WALLS TRANSMIT THE LOADS TO THE BUILDING FOUNDATION.

5. SEISMIC DESIGN:
   - A. SEISMIC RESPONSE COEFFICIENT: Cs= 0.283
   - B. DESIGN BASE SHEAR: V = 25 KIPS (NORTH-SOUTH)
     V = 24 KIPS (EAST-WEST)
     WHERE: R= 6.5 FOR LIGHT FRAME WOOD SHEAR WALLS
     SS= 2.42
     S1= 0.85
     SDS= 1.68
     SD1= 1.24
     SEISMIC IMPORTANCE FACTOR (IE): 1.0
     RISK CATEGORY: II
     SITE CLASS: E
     SEISMIC DESIGN CATEGORY: D
     RHO= 1.3 (NORTH-SOUTH), 1.3 (EAST-WEST)
   - C. ANALYSIS PROCEDURE: LINEAR STATIC
   - D. BASE LEVEL USED IN ANALYSIS: GROUND
   - E. STRUCTURAL IRREGULARITIES:
     - a. VERTICAL: IN-PLANE DISCONTINUITIES IN VERTICAL LATERAL FORCE RESISTING SYSTEM
     - b. HORIZONTAL: [REFERENCE CODE TYPE FROM TABLE]

6. DESIGN TEAM

JAY YIN	ASSOCIATE PRINCIPAL
KEVIN McENTEE	ENGINEER
ADDIE ALBRO	ENGINEER
KATRINA MILLER	BIM SPECIALIST

CLIENT

ALAMEDA COUNTY

NOTE: If this drawing is not 22"x34" it has been revised from its original size and the scales noted on drawing/details are no longer applicable.

© 2022 Shah Kawasaki Architects

Revision Number	DATE	ISSUE DESCRIPTION
1	09/03/2026	PERMIT SET

Project

WHITECOTTON COTTAGE REHABILITATION

15400 FOOTHILL BLVD
SAN LEANDRO, CA 94578

Architect of Record

P&T

Consultant

Degenkolb

DEGENKOLB ENGINEERS
601 12th Street, Suite 400
Oakland, CA 94607
510.272.9040 PHONE
www.degenkolb.com

REGISTERED PROFESSIONAL ENGINEER
JAY C. YIN
No. 4521
STRUCTURAL
STATE OF CALIFORNIA
9/2/26

Drawing Title

STRUCTURAL GENERAL NOTES

Drawing No.

S0.02

SKA Project Number: C3C78027.01

ABBREVIATIONS

256	
(E)	EXISTING
#	NUMBER
&	AND
@	AT
Ø	DIAMETER OR ROUND
ℓd	DEVELOPMENT LENGTH
ℓdh	HOOK DEVELOPMENT LENGTH
ℓs	LAP SPLICE LENGTH
AA	ADHESIVE ANCHOR
AB	ANCHOR BOLT
ABV	ABOVE
AC	ASPHALT CONCRETE
ADDL	ADDITIONAL
ADJ	ADJACENT
AGGR	AGGREGATE
ALT	ALTERNATE
ALUM	ALUMINUM
ANSI	AMERICAN NATIONAL STANDARDS INSTITUTE
APPROX	APPROXIMATE
AR	ANCHOR ROD
ARCH	ARCHITECTURAL / ARCHITECT
ASPH	ASPHALT
ASTM	AMERICAN SOCIETY for TESTING and MATERIALS
AWG	AMERICAN WIRE GAUGE
B.O.	BOTTOM OF
BF	BOTH FACES
BF	BRACED FRAME
BLDG	BUILDING
BLK, BLKG	BLOCK OR BLOCKING
BLW	BELOW
BM, BMS	BEAM, BEAMS
BN	BOUNDARY NAILING
BOF	BOTTOM OF FOOTING
BOT	BOTTOM
BRBF	BUCKLING RESTRAINED BRACE FRAME
BRCG	BRACING
BRG	BEARING
BS	BOTH SIDES
BSMT	BASEMENT
BTWN	BETWEEN
BW	BOTH WAYS
C	CHANNEL
CIP	CAST IN PLACE
CJ	CONSTRUCTION JOINT
CJP	COMPLETE JOINT PENETRATION
CL	CENTERLINE
CLG	CEILING
CLR	CLEAR
CMU	CONCRETE MASONRY UNIT
COL	COLUMN
CONC	CONCRETE
CONN	CONNECTION
CONSTR	CONSTRUCTION
CONT	CONTINUOUS
CSK	COUNTERSINK
CTR	CENTER
d	PENNY (NAIL SIZE)
DBA	DEFORMED BAR ANCHOR
DBL	DOUBLE
DEMO	DEMOLITION
DET, DETS	DETAIL, DETAILS
DIA, DIAM	DIAMETER
DIAG	DIAGONAL
DIM, DIMS	DIMENSION, DIMENSIONS
DIST	DISTANCE
DK, DKG	DECK OR DECKING
DN	DOWN
DO	DITTO
DP	DEEP
DS	DIAGONAL SHEATHING
DSA	DIVISION OF THE STATE ARCHITECT
DWG, DWGS	DRAWING, DRAWINGS
DWL, DWLS	DOWEL, DOWELS
EA	EACH
EBF	ECCENTRIC BRACE FRAME
EF	EACH FACE
EJ	EXPANSION JOINT
EL	ELEVATION
ELEC	ELECTRICAL
ELEV	ELEVATOR
EMBED	EMBEDMENT
EN	EDGE NAILING
EOS	EDGE OF SLAB
EQ	EQUAL
EQUIP	EQUIPMENT
ES	EACH SIDE
EW	EACH WAY
EXCAV	EXCAVATION
EXP	EXPANSION
EXT	EXTERIOR
FDN	FOUNDATION
FF	FAR FACE
FIN	FINISH
FLG	FLANGE
FLR, FLRS	FLOOR, FLOORS
FN	FIELD NAILING
FO	FACE OF
FOC	FACE OF CONCRETE
FOS	FACE OF STUD
FP	FIREPROOF
FRMG	FRAMING
FS	FAR SIDE
FT	FOOT OR FEET
FTG, FTGS	FOOTING, FOOTINGS
GA	GAUGE
GALV	GALVANIZED
GL	GLU-LAM
GLB	GLU-LAM BEAM
GR	GRADE
GRND	GROUND
GYP	GYPSUM
HDG	HOT DIPPED GALVANIZED
HDR	HEADER
HK, HKS	HOOK, HOOKS
HORIZ, (H)	HORIZONTAL
HP	HIGH POINT
HSB	HIGH STRENGTH BOLTS
HSS	HOLLOW STRUCTURAL SECTION
HT	HEIGHT
ID	INSIDE DIAMETER/DIMENSION
INFO	INFORMATION
JH	JOIST HANGER
JST,JSTS	JOIST, JOISTS
JT	JOINT
KO	KNOCK-OUT
L	ANGLE
LEV	LEVEL
LLH	LONG LEG HORIZONTAL
LLV	LONG LEG VERTICAL
LOC	LOCATION
LONGIT	LONGITUDINAL
LP	LOW POINT
LT	LIGHT
LWC	LIGHTWEIGHT CONCRETE
MAX	MAXIMUM
MB	MACHINE BOLT
MECH	MECHANICAL
MEP	MECHANICAL, ELECTRICAL, PLUMBING DOCUMENTS
MEZZ	MEZZANINE
MF	MOMENT FRAME
MFR	MANUFACTURER
MIN	MINIMUM
MISC	MISCELLANEOUS
MTD	MOUNTED
MTL	METAL
NF	NEAR FACE
NIC	NOT IN CONTRACT
NOM	NOMINAL (DIAMETER)
NS	NEAR SIDE
NTS	NOT TO SCALE
NWC	NORMAL WEIGHT CONCRETE
OBF	ORDINARY BRACED FRAMES
OC	ON CENTER
OD	OUTSIDE DIAMETER
OPH	OPPOSITE HAND
OPNG	OPENING
OPP	OPPOSITE
P-T	POST-TENSION
PC, PCS	PIECE, PIECES
PCC	PRECAST CONCRETE
PERP	PERPENDICULAR
PJP	PARTIAL JOINT PENETRATION
PL	PLATE
PLYWD	PLYWOOD
PT	PRESSURE TREATED
PTN	PARTITION
R	RADIUS
REBAR	REINFORCING BAR
REF	REFERENCE
REINF	REINFORCING
REQD	REQUIRED
REV	REVISION
RFG	ROOFING
RO	ROUGH OPENING
RSJ	ROLLED STEEL JOIST
S.A.D.	SEE ARCHITECTURAL DOCUMENTS/DRAWINGS
S.M.D.	SEE MECHANICAL DRAWINGS
SCHED	SCHEDULE
SECT	SECTION
SEOR	STRUCTURAL ENGINEER OF RECORD
SFRS	SEISMIC FORCE RESISTING SYSTEM
SHT	SHEET
SHTG	SHEATHING
SIM	SIMILAR
SL	SLOPE
SMF	SPECIAL MOMENT FRAME
SMS	SHEET METAL SCREW
SOG	SLAB ON GRADE
SP	STRUCTURAL PLYWOOD
SPEC, SPECS	SPECIFICATION, SPECIFICATIONS
SPSW	SPECIAL PLATE SHEAR WALL
SQ	SQUARE
SS	STAINLESS STEEL
STAG	STAGGER or STAGGERED
STD	STANDARD
STIF	STIFFENER
STIR	STIRRUP OR STIRRUPS
STL	STEEL
STRUCT	STRUCTURAL
SUB	SUBSTITUTE
SUSP	SUSPENDED
SYMM	SYMMETRICAL
T&B	TOP AND BOTTOM
T&G	TONGUE and GROOVE
T.O.	TOP OF
THK	THICK
THRD	THREADED
THRU	THROUGH
TN	TOE NAIL
TOC	TOP OF CONCRETE
TOF	TOP OF FOOTING
TOS	TOP OF STEEL
TOW	TOP OF WALL
TR	TREAD
TYP	TYPICAL
TWS	THREADED WELDED STUD
UON	UNLESS OTHERWISE NOTED
URM	UNREINFORCED MASONRY
VENT	VENTILATE
VERT, (V)	VERTICAL
VIF	VERIFY IN FIELD
W or WF	WIDE FLANGE
W/	WITH
W/O	WITHOUT
WD	WOOD
WP	WORK POINT
WS	WOOD SCREW
WT	WEIGHT/TEE SECTION
WWM	WELDED WIRE MESH
WSP	WOOD STRUCTURAL PANEL
X HVY	EXTRA HEAVY
X STR	EXTRA STRONG
XX HVY	DOUBLE EXTRA HEAVY
XX STR	DOUBLE EXTRA STRONG

REFERENCE SYMBOLS

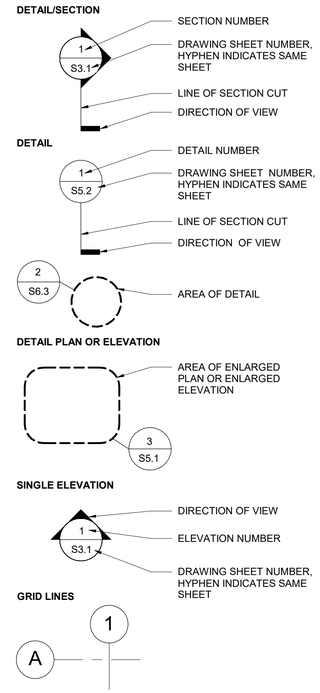

MATERIAL SYMBOLS

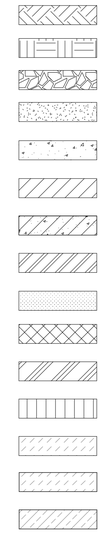

SHEET INDEX

Sheet Number	Sheet Name
S0.01	STRUCTURAL GENERAL NOTES
S0.02	STRUCTURAL GENERAL NOTES
S0.03	STRUCTURAL SYMBOLS AND ABBREVIATIONS
S1.00	BASEMENT PLAN
S1.01	FIRST FLOOR FRAMING PLAN
S1.02	SECOND FLOOR FRAMING PLAN
S1.03	ATTIC FRAMING PLAN
S1.04	ROOF FRAMING PLAN
S1.05	TRASH ENCLOSURE FRAMING & FOUNDATION PLAN
S1.06	SECTIONS - ELEVATOR SHAFT
S1.07	EXTERIOR RAMP FRAMING PLANS
S2.00	WOOD TYPICAL DETAILS
S2.01	WOOD TYPICAL DETAILS
S2.02	WOOD DETAILS
S2.03	FOUNDATION DETAILS
S2.04	EXTERIOR RAMP DETAILS
S2.05	WOOD DETAILS
S2.06	TRASH ENCLOSURE DETAILS
S2.07	TYPICAL CONCRETE DETAILS
S2.08	WOOD DETAILS

CLIENT

ALAMEDA COUNTY

NOTE: If this drawing is not 22"x34" it has been revised from its original size and the scales noted on drawing/details are no longer applicable.

© 2022 Shah Kawasaki Architects

Revision Number	DATE	ISSUE DESCRIPTION
1	09/03/2026	PERMIT SET

Project

WHITECOTTON COTTAGE REHABILITATION

15400 FOOTHILL BLVD
SAN LEANDRO, CA 94578

Architect of Record

P&T

Consultant

Degenkolb

DEGENKOLB ENGINEERS
601 12th Street, Suite 400
Oakland, CA 94607
510.272.9040 PHONE
www.degenkolb.com

REGISTERED PROFESSIONAL ENGINEER
JAY C. YIN
No. 4521
STRUCTURAL
STATE OF CALIFORNIA
9/2/26

Drawing Title

STRUCTURAL SYMBOLS AND ABBREVIATIONS

Drawing No.

S0.03

SKA Project Number: C3C78027.01

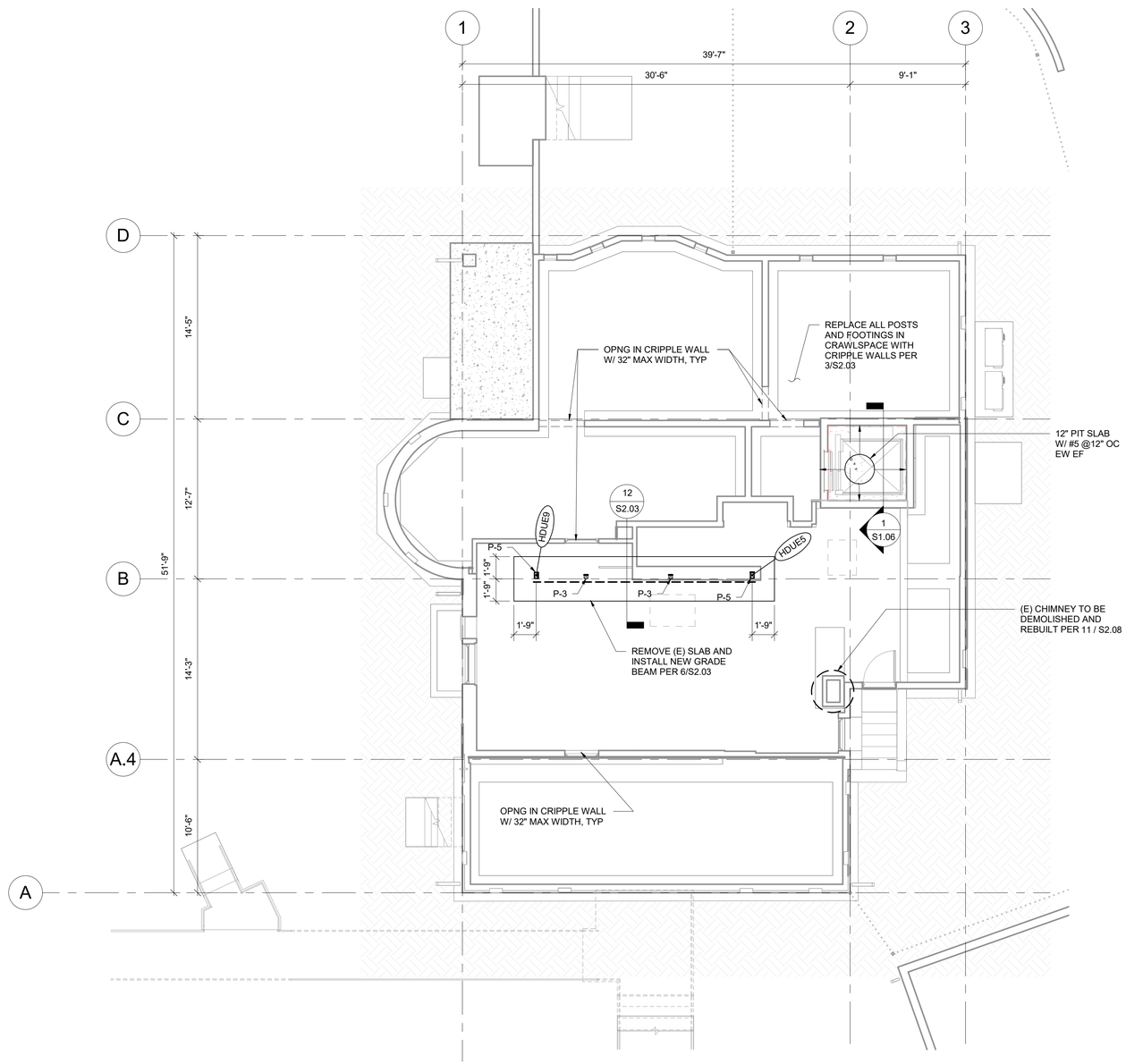

1 BASEMENT PLAN
3/16" = 1'-0"

SHEET NOTES

1. POSTS SHOWN ARE POSTS SUPPORTED AT BASEMENT LEVEL.
2. SEE FIRST FLOOR FRAMING PLAN FOR POSTS LAND ON TOP OF BASEMENT WALLS.
3. GRADE BEAMS AND PIERS FOR FIRST FLOOR FRAMING PLAN ARE SHOWN ON FIRST FLOOR FRAMING PLAN.
4. SEE ADDITIONAL SHEET NOTES ON S1.01.

CLIENT

GENERAL SERVICES AGENCY GSA COUNTY OF ALAMEDA

ALAMEDA COUNTY

NOTE: If this drawing is not 22"x34" it has been revised from its original size and the scales noted on drawing/details are no longer applicable.

© 2022 Shah Kawasaki Architects

Revision Number	DATE	ISSUE DESCRIPTION
1	09/03/2026	PERMIT SET

Project

WHITECOTTON COTTAGE REHABILITATION

15400 FOOTHILL BLVD
SAN LEANDRO, CA 94578

Architect of Record

P&T

Consultant

Degenkolb

DEGENKOLB ENGINEERS
601 12th Street, Suite 400
Oakland, CA 94607
510.272.9040 PHONE
www.degenkolb.com

REGISTERED PROFESSIONAL ENGINEER
JAY C. YIN
No. 4521
STRUCTURAL
STATE OF CALIFORNIA
9/2/26

Drawing Title

BASEMENT PLAN

Drawing No.

S1.00

SKA Project Number: C3C78027.01

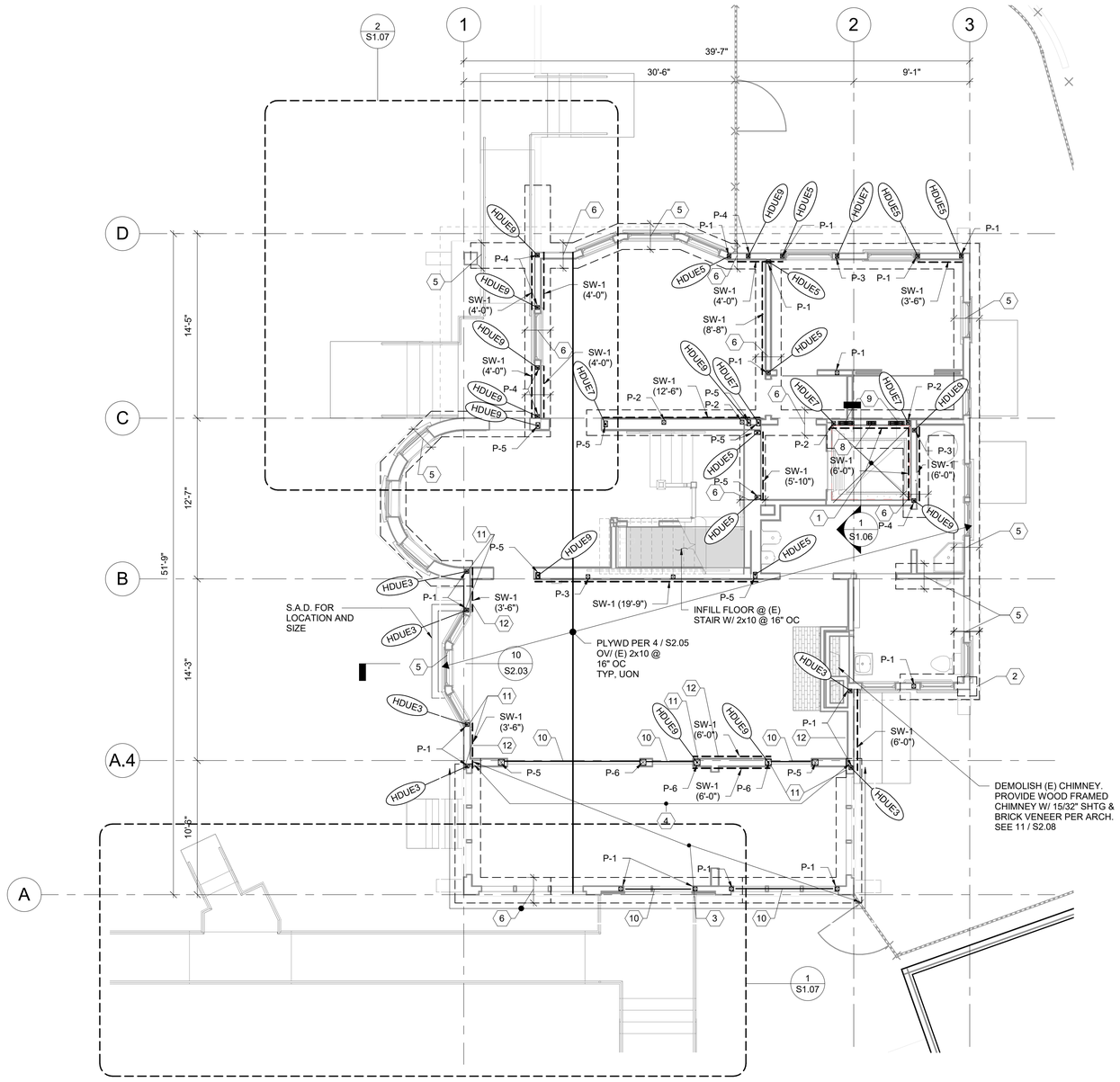

1 FIRST FLOOR FRAMING PLAN
3/16" = 1'-0"

LATERAL RESISTANCE PANEL SCHEDULE

ENGINEERED SHEAR WALLS	
MARK	CONSTRUCTION METHOD
SW-1 (X'-X")	15/32" SP W/ 4" BN, 12" FN 1/2" DIA A.B. @ 24" OC TO FDN OR 16d @ 6" OC TO DIAPHRAGM

*PROVIDE 3x MIN PANEL JOINTS

SHEET NOTES

1. CONTRACTOR TO PROBE ALL EXISTING FIRST FLOOR, SECONDE FLOOR, CEILING JOISTS, AND ROOF RAFTERS FOR DRY ROT. REPLACE IN KIND OR SISTERING WHEN DRY ROT EXCEEDS ONE QUARTER OF MEMBER DEPTH. SISTER PER 9 / S2.02
2. CONTRACTOR TO PROBE ALL FIRST FLOOR AND SECONDE WALL STUDS FOR DRY ROT. REPLACE IN KIND OR SISTERING WHEN DRY ROT EXCEEDS ONE QUARTER OF MEMBER DEPTH. SISTER PER 9 / S2.02
3. TOP OF PERIMETER GRADE BEAMS IS TO BE 11" BELOW THE BOTTOM OF L1 FLOOR JOIST FRAMING (TO ALLOW FOR 11" GAP BETWEEN FLOOR JOISTS AND GRADE BEAMS). TOP OF INTERIOR GRADE BEAMS IS TO BE 1'-7" BELOW THE BOTTOM OF L1 FLOOR JOIST FRAMING. (TO ALLOW FOR 1'-7" GAP BETWEEN FLOOR JOISTS AND GRADE BEAMS). CONTRACTOR TO SURVEY THE BOTTOM OF ALL L1 FLOOR FRAMING ELEVATIONS AND ESTABLISH TOP OF GRADE BEAM ELEVTION TO STAISFY THE ABOVE REQUIREMENT. ADJUST THE HEIGHT OF CRIPPLE WALL TO SUIT.
4. PROJECT DESIGN INTENT IS ALL EXISTING AND NEW WALLS WILL BE BEARING ON NEW CRIPPLE WALLS AND NEW CONCRETE GRADE BEAMS. NEW CONCRETE GRADE BEAMS ARE PER DETAILS 3 AND 4 OF S2.03. WHERE (E) CRIPPLE WALL AND/OR (E) FOOTINGS ARE IN CONFLICT OF NEW CRIPPLE WALLS AND NEW GRADE BEAMS, SHORE AND REMOVE (E) CRIPPLE WALLS AND (E) FOOTINGS PER DETAIL 1 OF S2.03. CONTRACTOR IS TO HIRE A PROFESSIONAL ENGINEER FOR TEMPORARY SHORING DESIGN.
5. "HAND EXCAVATED PIERS", AS DEFINED IN THE GEOTECHNICAL REPORT, TOGETHER WITH CONCRETE GRADE BEAMS, ARE THE FOUNDATION SYSTEM OF THE PROJECT. DUE TO SITE AND EXISTING BUILDING CONSTRAINTS, CONTRACTOR IS TO REVIEW CONSTRUCTION DOCUMENTS AND SITE CONDITIONS AND MAKE ALLOWANCES FOR THE INSTALLATION OF THE FOUNDATION SYSTEM WITH NEW CRIPPLE WALLS. IF THE REMOVAL OF EXISTING LEVEL 1 FRAMING ARE DEEMED NECESSARY FOR CONSTRUCTION, CONTRACTOR IS TO SUBMIT PLANS TO SHOW THE EXTENT OF EXISTING LEVEL 1 FRAMING REMOVAL, TOGETHER WITH TEMPORARY SHORING DESIGNED BY A PROFESSIONAL ENGINEER, AND COORDIANTE WITH THE SEOR WITH REMOVAL AND PATCHING REQUIREMENTS PRIOR TO ANY WORK.
6. SEE DETAIL 3/S2.03 FOR CRIPPLE WALL AT NON SHEAR WALLS
7. SEE DETAILS 5 AND 6/S2.02 FOR CRIPPLE WALL AT SHEAR WALLS
8. SEE KEY NOTES FOR DIMENSIONAL INFORMATION FOR GRADE BEAMS
9. ALL POSTS EXTEND DOWN TO L1 FOOTING OR BASEMENT FOOTING. SEE 9/S2.01 FOR POST SCHEDULE
10. CONTRACTOR TO REVIEW CONSTRUCTION DOCUMENTS AND PEFORM SURVEYS TO LOCATE ALL POST LOCATIONS RELATIVE TO EXISTING BASEMENT WALLS AND SUBMIT DIMENSIONED SHOP DRWINGS TO INDICATE LOCATIONS OF POSTS THAT ARE SUPPORTED BY BASEMENT WALLS PRIOR TO START OF CONSTRUCTION.
11. CONTRACTOR TO REVIEW CONSTRUCTION DOCUMENTS AND PEFORM SURVEYS TO LOCATE ALL FIREPLACE FRAMING RELATIVE TO EXISTING BASEMENT BRICK WALLS AND FOUNDATIONS, AND SUBMIT DIMENSIONED SHOP DRWINGS TO INDICATE LOCATIONS OF POSTS THAT ARE SUPPORTED BY BASEMENT FOUNDATIONS PRIOR TO START OF CONSTRUCTION.
12. ASSUME 5% OF DIAGONAL SHEATHING AND FLOOR JOISTS TO BE REPLACED.
13. ASSUME 10% OF EXTERIOR STUDS REQUIRE REPAIR BY SISTERING.
14. SEE 2/S2.03 FOR ALL NEW GRAVITY POST TO CONC. FOOTING
15. REPLACE ALL (E) POSTS WITH NEW POST PER 2/S2.03
16. RAT SLAB AS SHOWN IN ARCHITECTURAL DRAWINGS TO BE 4 INCH THICK, 2 SACK SAND-CEMENT SLURRY MIX.

KEY NOTES

1. NEW ELEVATOR OPENING & PIT BLW. MODIFY EXISTING FLOOR FRAMING PER 10/S2.00
2. 1'-6"-0" W X 1'-6" HAND EXCAVATED PIERS (5/S2.03) 4'-0" LONG, MEASURED FROM BOTTOM OF GRADE BEAM GROUND. SPACED AT 6'-0" OC MAX. AT ALL GRADE BEAMS (4/S203) TYP, UON. PROVIDE PIER WHERE FOOTINGS INTERSECT.
3. EXISTING STRUCTURE SLOPES SOUTHWARD STARTING AT APPROX. GRID LINE A.4. ELEVATIONS AT L1 AND L2 ARE APPROXIMATELY 6" LOWER AT GRID LINE A. CONTRACTOR TO PROVIDE TEMPORARY SHORING AND RAISE THE PORTION BETWEEN GRID LINE A AND A.4 AS INDICATED. ASSUME BUILDING NEEDS TO BE RAISED BY 6"± ALONG GRID LINE A TO ACHIEVE A TOP OF FINISHED FLOOR ELEVATION OF +104.22' ±. CONTRACTOR TO SURVEY THE EXISTING FLOOR AND DETERMINE AMOUNT OF LIFTING REQUIRED TO ACHIEVE ELEVATION.
4. ALL LEVEL 1, LEVEL 2, ATTIC, AND ROOF FRAMING ALONG GRID LINE A.4 ARE ASSUMED TO BE DAMAGED DURING PRIOR BUILDING SETTLEMENT. CONRACTOR TO REPORT DAMAGES BEFORE STRUCTURE IS RAISED AND ALSO MONITOR STATE OF DAMAGES DRUING THE LIFTING PROCESS. CONTRACTOR IS RESPONSIBLE FOR REPAIR EXISTING DAMGAGES AND ANY DAMAGES ASSOCIATED WITH THE LIFTING PROCESS.
5. 2'-0" W x 2'-6" D GRADE BEAM (3/S2.03) AT TYPICAL WALLS TO REPLACE (E) FOOTING. PROVIDE SHORING (1/S2.03)
6. 2'-0" W X 2'-6" D GRADE BEAM (4/S2.03) AT SHEAR WALLS TO REPLACE (E) FOOTING. PROVIDE SHORING (1/S2.03)
7. 3'-0" W X 2'-6" D GRADE BEAM (4/S2.03) AT SHEAR WALLS TO REPLACE (E) FOOTING. PROVIDE SHORING (1/S2.03)
8. (2) 2x4 STUDS AT EACH END OF (2) 2x6 STUDS BUILT-UP POSTS FOR ELEVATOR RAIL BRACKET SUPPORT, FULL HEIGHT
9. (2) 2x4 STUDS AT EACH END OF (2) 2x12 STUDS BUILT-UP POSTS FOR ELEVATOR RAIL BRACKET SUPPORT, FULL HEIGHT
10. PROVIDE 3.5X11.25 PSL HEADER
11. POST TO (E) CONCRETE BASEMENT WALL ANCHOR DETAIL. SEE 9/S2.03
12. CONNECT ALL SHEAR WALLS TO (E) CONCRETE BASEMENT WALL PER 11/S2.03

CLIENT

ALAMEDA COUNTY

NOTE: If this drawing is not 22"x34" it has been revised from its original size and the scales noted on drawing/details are no longer applicable.

© 2022 Shah Kawasaki Architects

Revision Number	DATE	ISSUE DESCRIPTION
1	09/03/2026	PERMIT SET

Project

WHITECOTTON COTTAGE REHABILITATION

15400 FOOTHILL BLVD
SAN LEANDRO, CA 94578

Architect of Record

P&T

Consultant

Degenkolb

DEGENKOLB ENGINEERS
601 12th Street, Suite 400
Oakland, CA 94607
510.272.9040 PHONE
www.degenkolb.com

REGISTERED PROFESSIONAL ENGINEER
JAY C. YIN
No. 4521
STRUCTURAL
STATE OF CALIFORNIA
9/2/26

Drawing Title

FIRST FLOOR FRAMING PLAN

Drawing No.

S1.01

SKA Project Number: C3C78027.01

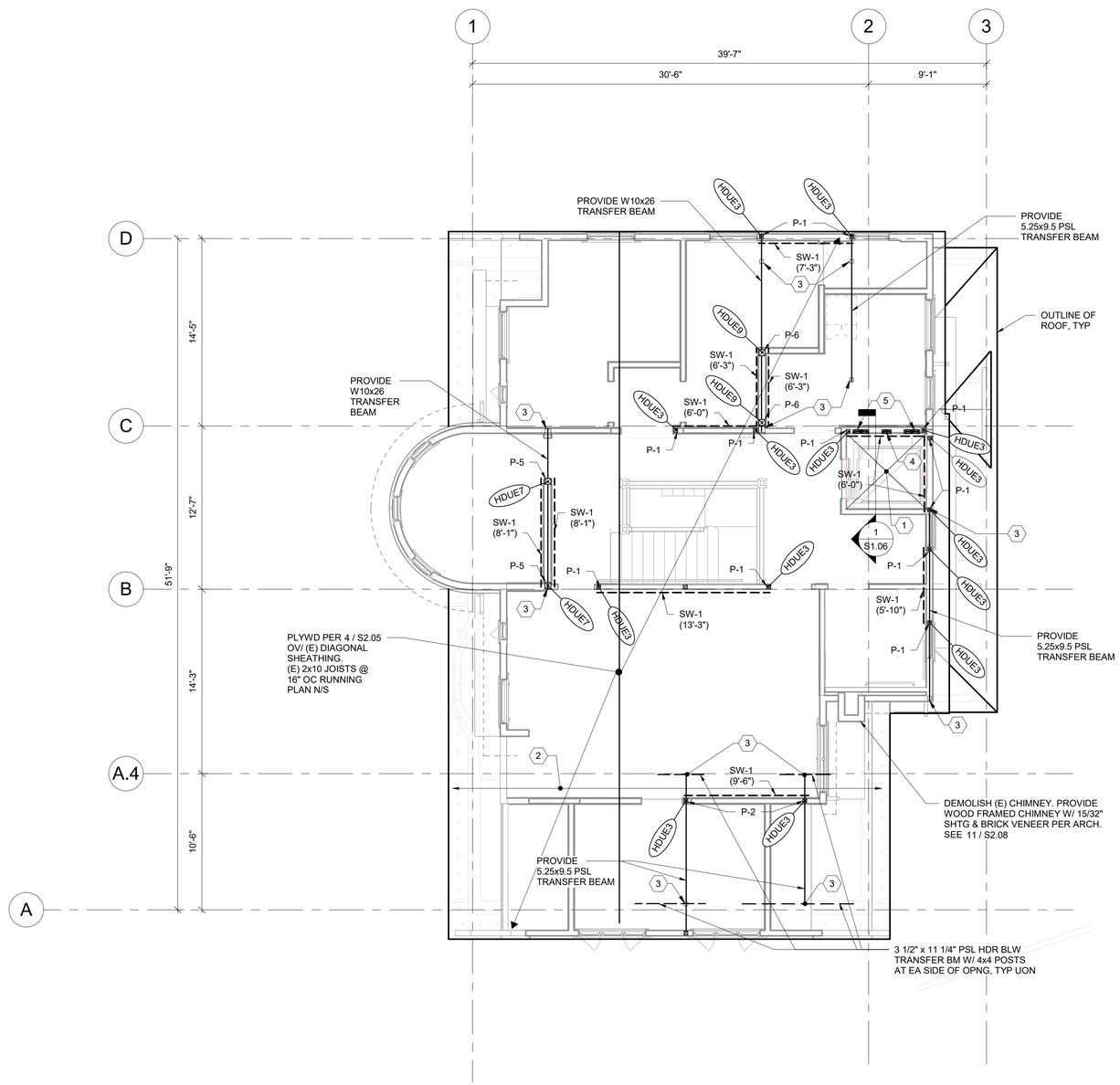

1 SECOND FLOOR FRAMING PLAN
3/16" = 1'-0"

LATERAL RESISTANCE PANEL SCHEDULE

ENGINEERED SHEAR WALLS	
MARK	CONSTRUCTION METHOD
SW-1 (X'-X")	15/32" SP W/ 4" BN, 12" FN 1/2" DIA A.B. @ 24" OC TO FDN OR 16d @ 6" OC TO DIAPHRAGM

SHEET NOTES

1. SEE S1.01 FOR SHEET NOTES.

KEY NOTES

1. NEW ELEVATOR OPENING. MODIFY EXISTING FLOOR FRAMING SUCH THE EXISTING FRAMING IS SUPPORTED ON NEW ELEVATOR SHAFT WALL BELOW
2. ASSUME ALL LEVEL 2 FRAMING ALONG GRID LINE A.4 WILL BE REPAIRED AS PART OF THE SHORING AND LIFTING OF LEVEL 1
3. ATTACH TRANSFER BEAM TO POST OR HDR BELOW PER 4 / S2.02
4. (2) 2x4 STUDS AT EACH END OF (2) 2x6 STUDS BUILT-UP POSTS FOR ELEVATOR RAIL BRACKET SUPPORT, FULL HEIGHT
5. (2) 2x4 STUDS AT EACH END OF (2) 2x12 STUDS BUILT-UP POSTS FOR ELEVATOR RAIL BRACKET SUPPORT, FULL HEIGHT

CLIENT

ALAMEDA COUNTY

NOTE: If this drawing is not 22"x34" it has been revised from its original size and the scales noted on drawing/details are no longer applicable.

© 2022 Shah Kawasaki Architects

Revision Number	DATE	ISSUE DESCRIPTION
1	09/03/2026	PERMIT SET

Project

WHITECOTTON COTTAGE REHABILITATION

15400 FOOTHILL BLVD
SAN LEANDRO, CA 94578

Architect of Record

P&T

Consultant

Degenkolb

DEGENKOLB ENGINEERS
601 12th Street, Suite 400
Oakland, CA 94607
510.272.9040 PHONE
www.degenkolb.com

REGISTERED PROFESSIONAL ENGINEER
JAY C. YIN
No. 4521
STRUCTURAL
STATE OF CALIFORNIA
9/2/26

Drawing Title

SECOND FLOOR FRAMING PLAN

Drawing No.

S1.02

SKA Project Number: C3C78027.01

SHEET NOTES

1. SEE S1.01 FOR SHEET NOTES.

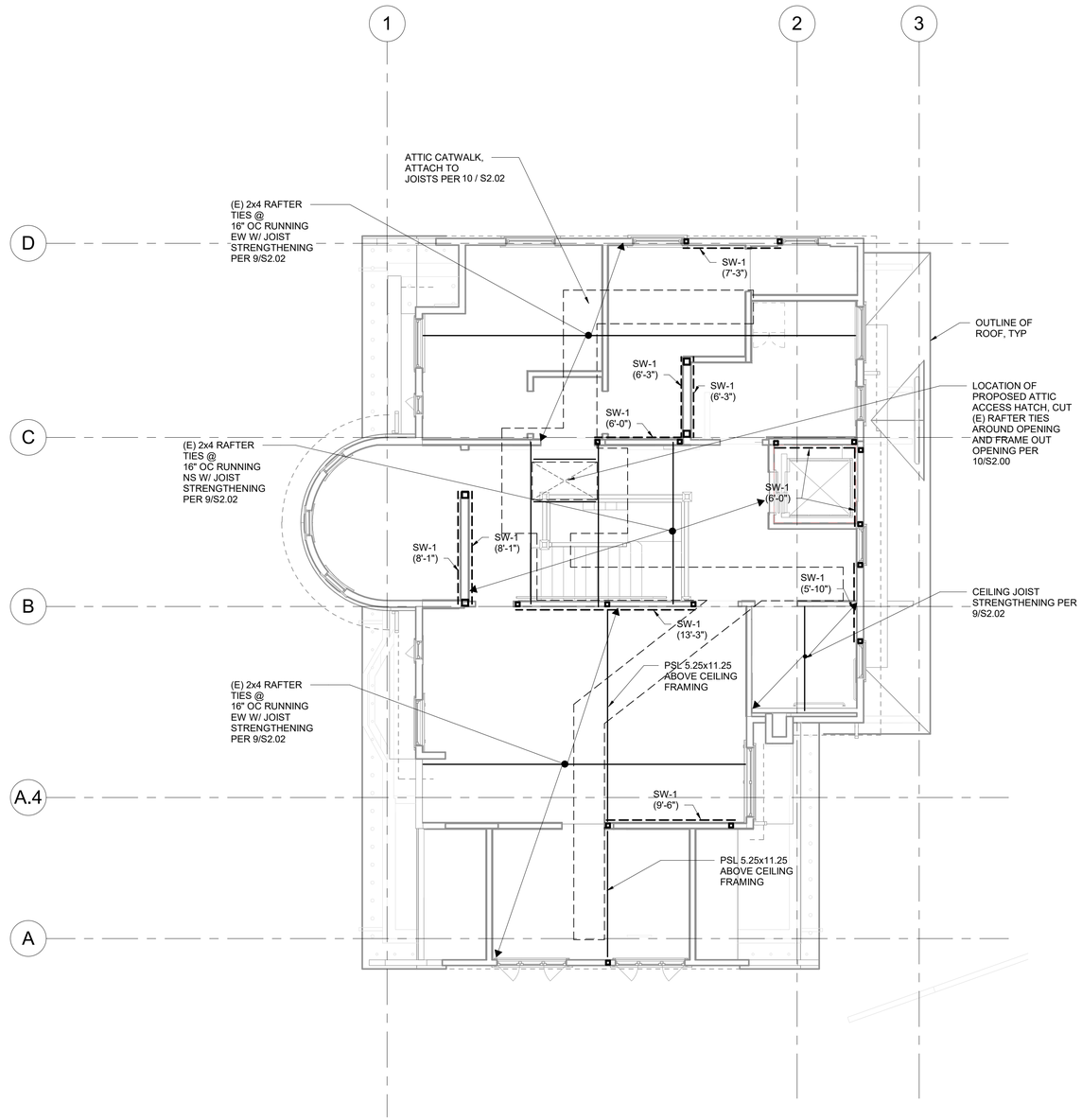

1 SECOND FLOOR FRAMING PLAN
3/16" = 1'-0"

CLIENT

GENERAL SERVICES AGENCY GSA COUNTY OF ALAMEDA

ALAMEDA COUNTY

NOTE: If this drawing is not 22"x34" it has been revised from its original size and the scales noted on drawing/details are no longer applicable.

© 2022 Shah Kawasaki Architects

Revision Number	DATE	ISSUE DESCRIPTION
1	09/03/2026	PERMIT SET

Project

WHITECOTTON COTTAGE REHABILITATION

15400 FOOTHILL BLVD
SAN LEANDRO, CA 94578

Architect of Record

P&T

Consultant

Degenkolb

DEGENKOLB ENGINEERS
601 12th Street, Suite 400
Oakland, CA 94607
510.272.9040 PHONE
www.degenkolb.com

REGISTERED PROFESSIONAL ENGINEER
JAY C. YIN
No. 4521
STRUCTURAL
STATE OF CALIFORNIA
9/2/26

Drawing Title

ATTIC FRAMING PLAN

Drawing No.

S1.03

SKA Project Number: C3C78027.01

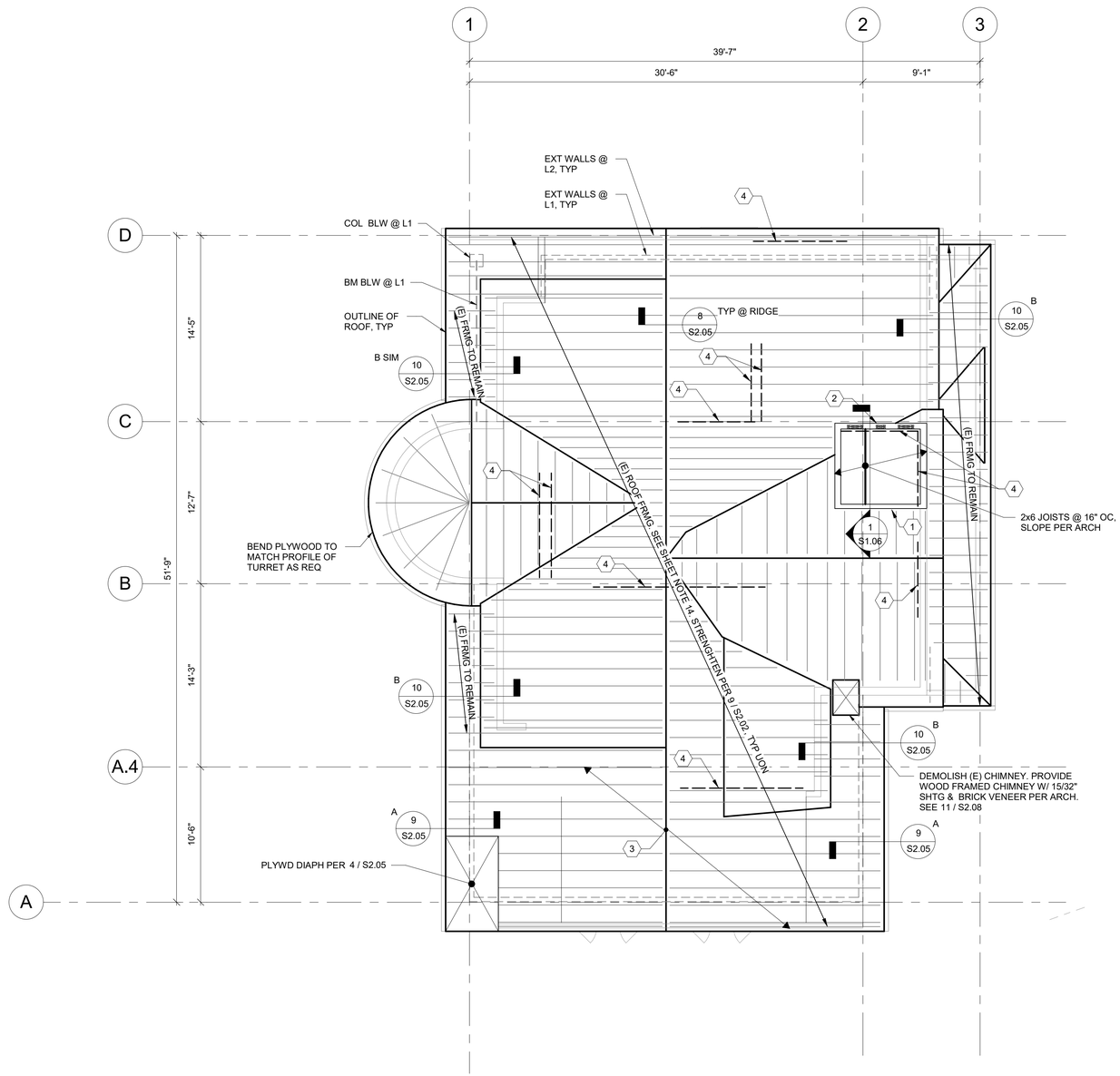

1 ROOF FRAMING PLAN
3/16" = 1'-0"

SHEET NOTES

1. SEE S1.01 FOR SHEET NOTES.

KEY NOTES

1. NEW OPENING IN EXISTING ROOF FRAMING FOR ELEVATOR POP-UP. MODIFY EXISTING ROOF FRAMING SUCH THE EXISTING FRAMING IS SUPPORTED ON THE NEW ELEVATOR SHAFT WALL BELOW
2. NEW ELEVATOR POP UP FRAMING 4' TALL ABOVE EXISTING ROOF FRAMING. ASSUME 2x4 STUDS @ 16" OC W/ 15/32 SHEATHING ON THE EXTERIOR.
3. ASSUME ALL EXISTING CEILING & ROOF FRAMING PLAN SOUTH OF GRID LINE A.4 WILL BE REPAIRED AS PART OF THE SHORING AND LIFTING OF THE BUILDING
4. SHEAR WALL BELOW, ATTACH TO ROOF DIAPH PER 6 / S2.05

CLIENT

GENERAL SERVICES AGENCY GSA COUNTY OF ALAMEDA

ALAMEDA COUNTY

NOTE: If this drawing is not 22"x34" it has been revised from its original size and the scales noted on drawing/details are no longer applicable.

© 2022 Shah Kawasaki Architects

Revision Number	DATE	ISSUE DESCRIPTION
1	09/03/2026	PERMIT SET

Project

WHITECOTTON COTTAGE REHABILITATION

15400 FOOTHILL BLVD
SAN LEANDRO, CA 94578

Architect of Record

P&T

Consultant

Degenkolb

DEGENKOLB ENGINEERS
601 12th Street, Suite 400
Oakland, CA 94607
510.272.9040 PHONE
www.degenkolb.com

REGISTERED PROFESSIONAL ENGINEER
JAY C. YIN
No. 4521
STRUCTURAL
STATE OF CALIFORNIA
9/2/26

Drawing Title

ROOF FRAMING PLAN

Drawing No.

S1.04

SKA Project Number: C3C78027.01

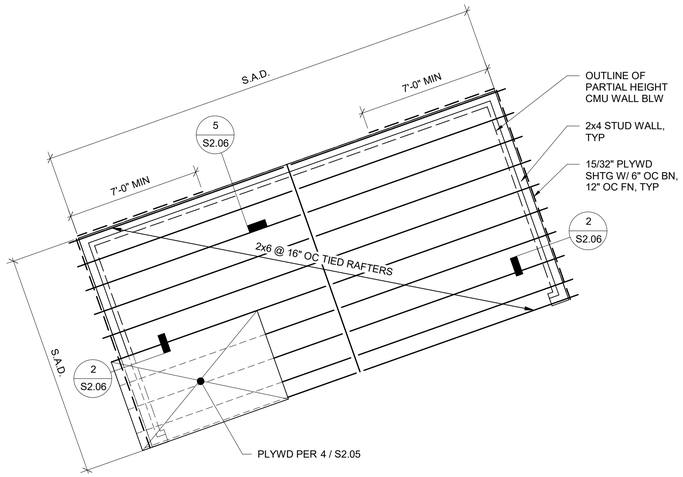

2 TRASH ENCLOSURE - ROOF FRAMING PLAN
1/4" = 1'-0"

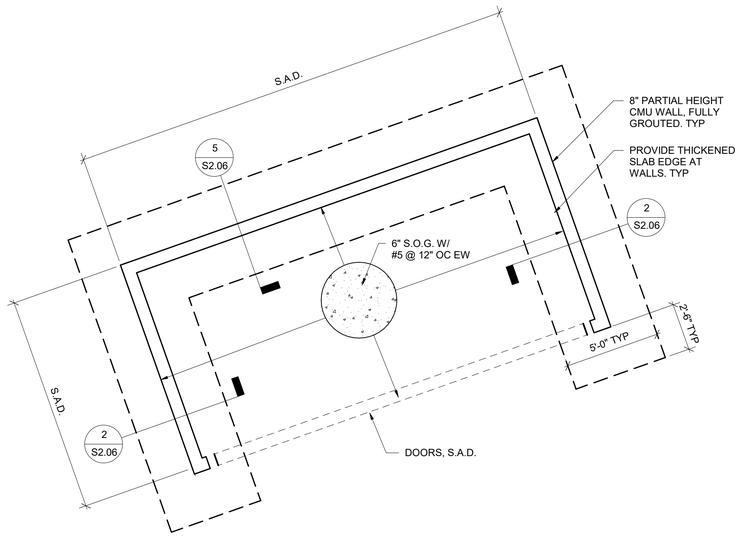

1 TRASH ENCLOSURE - FOUNDATION PLAN
1/4" = 1'-0"

CLIENT

GENERAL SERVICES AGENCY GSA COUNTY OF ALAMEDA

ALAMEDA COUNTY

NOTE: If this drawing is not 22"x34" it has been revised from its original size and the scales noted on drawing/details are no longer applicable.

© 2022 Shah Kawasaki Architects

Revision Number	DATE	ISSUE DESCRIPTION
1	09/03/2026	PERMIT SET

Project

WHITECOTTON COTTAGE REHABILITATION

15400 FOOTHILL BLVD
SAN LEANDRO, CA 94578

Architect of Record

P&T

Consultant

Degenkolb

DEGENKOLB ENGINEERS
601 12th Street, Suite 400
Oakland, CA 94607
510.272.9040 PHONE
www.degenkolb.com

REGISTERED PROFESSIONAL ENGINEER
JAY C. YIN
No. 4521
STRUCTURAL
STATE OF CALIFORNIA
9/2/26

Drawing Title

TRASH ENCLOSURE FRAMING & FOUNDATION PLAN

Drawing No.

S1.05

SKA Project Number: C3C78027.01

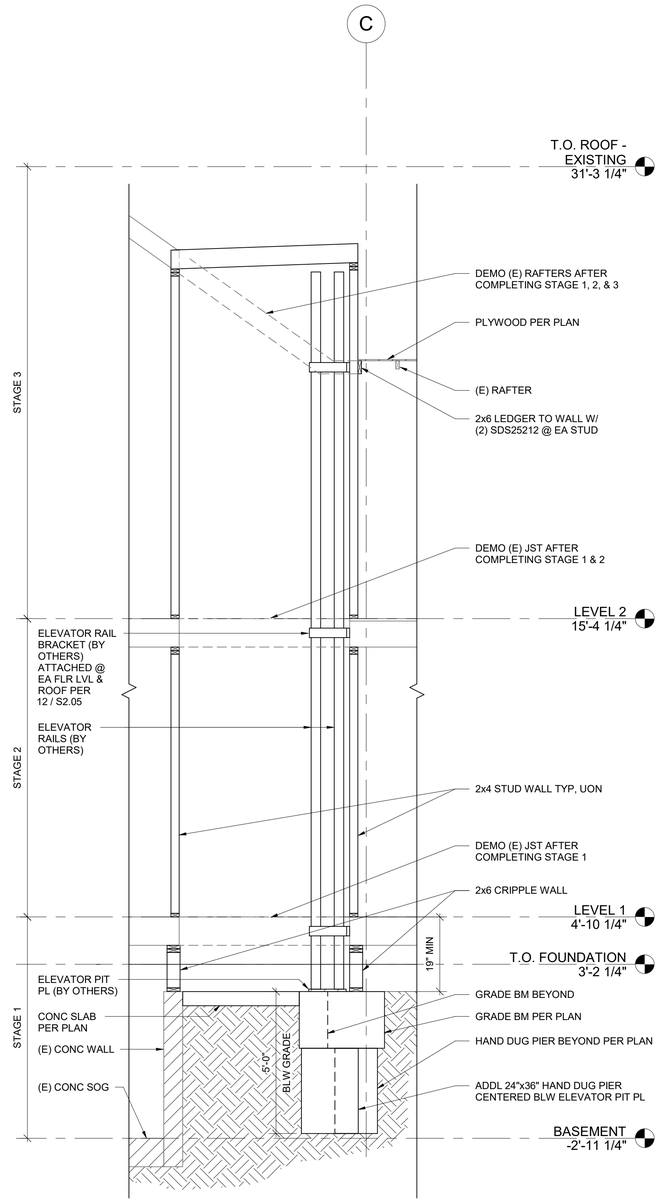

1 ELEVATOR SHAFT
3/8" = 1'-0"

CLIENT

ALAMEDA COUNTY

NOTE: If this drawing is not 22"x34" it has been revised from its original size and the scales noted on drawing/details are no longer applicable.

© 2022 Shah Kawasaki Architects

Revision Number	DATE	ISSUE DESCRIPTION
1	09/03/2026	PERMIT SET

Project

WHITECOTTON COTTAGE REHABILITATION

15400 FOOTHILL BLVD
SAN LEANDRO, CA 94578

Architect of Record

P&T

Consultant

Degenkolb

DEGENKOLB ENGINEERS
601 12th Street, Suite 400
Oakland, CA 94607
510.272.9040 PHONE
www.degenkolb.com

REGISTERED PROFESSIONAL ENGINEER
JAY C. YIN
No. 4521
STRUCTURAL
STATE OF CALIFORNIA
9/2/26

Drawing Title

SECTIONS - ELEVATOR SHAFT

Drawing No.

S1.06

SKA Project Number: C3C78027.01

SHEET NOTES

1. REFER TO CIVIL DRAWINGS FOR CONC RAMPS AND FLATWORK.
2. S.A.D. FOR DIMENSIONS.

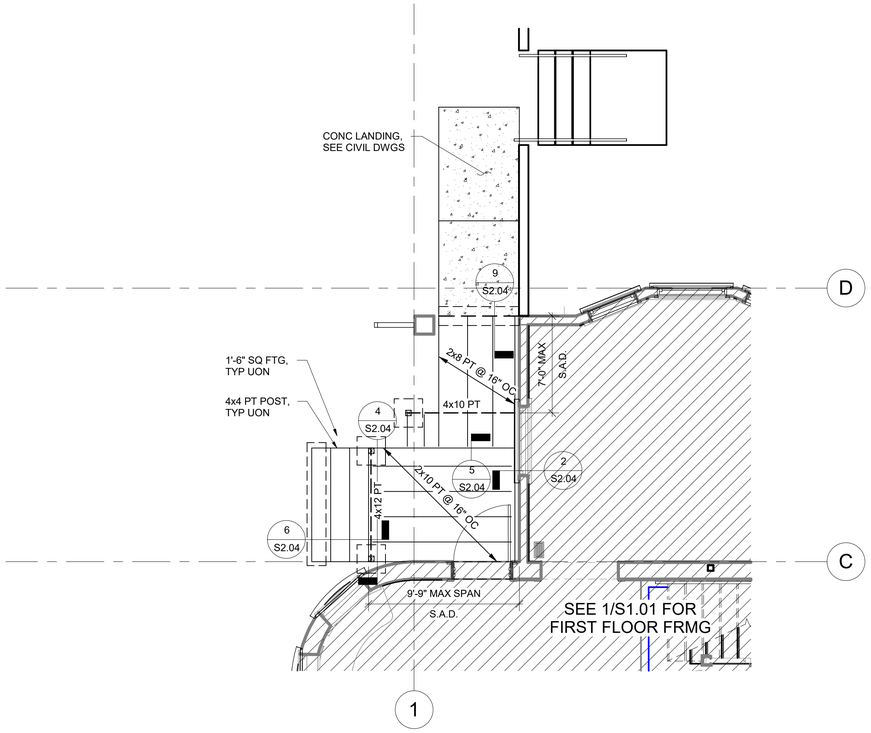

2 PLAN NORTHWEST RAMP FRAMING PLAN
1/4" = 1'-0"

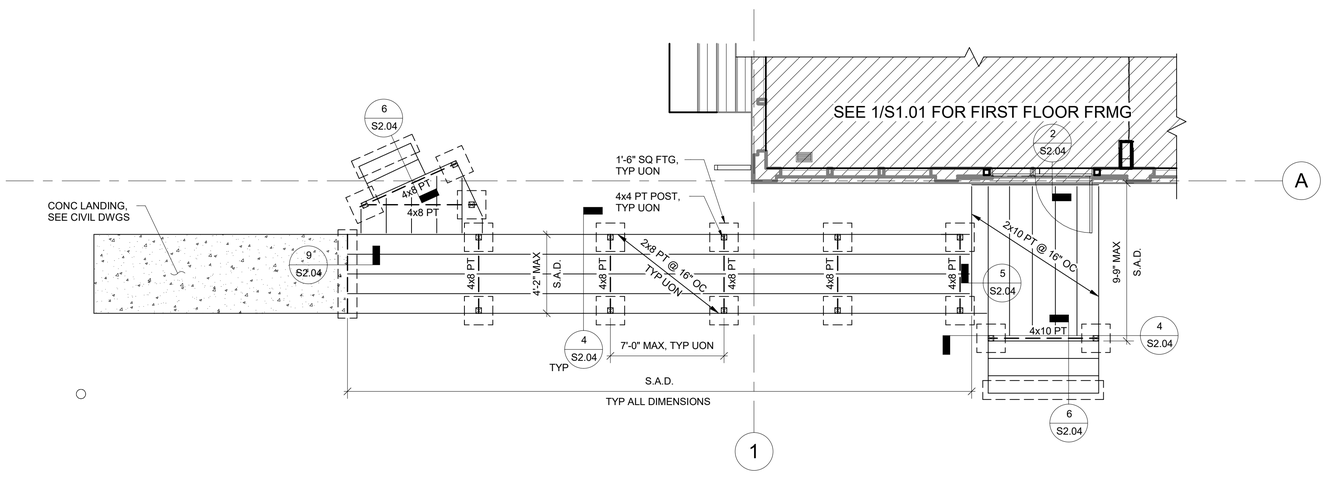

1 SOUTH RAMP FRAMING
1/4" = 1'-0"

CLIENT

GENERAL SERVICES AGENCY GSA COUNTY OF ALAMEDA

ALAMEDA COUNTY

NOTE: If this drawing is not 22"x34" it has been revised from its original size and the scales noted on drawing/details are no longer applicable.

© 2022 Shah Kawasaki Architects

Revision Number	DATE	ISSUE DESCRIPTION
1	09/03/2026	PERMIT SET

Project

WHITECOTTON COTTAGE REHABILITATION

15400 FOOTHILL BLVD
SAN LEANDRO, CA 94578

Architect of Record

P&T

Consultant

Degenkolb

DEGENKOLB ENGINEERS
601 12th Street, Suite 400
Oakland, CA 94607
510.272.9040 PHONE
www.degenkolb.com

REGISTERED PROFESSIONAL ENGINEER
JAY C. YIN
No. 4521
STRUCTURAL
STATE OF CALIFORNIA
9/2/26

Drawing Title

EXTERIOR RAMP FRAMING PLANS

Drawing No.

S1.07

SKA Project Number: C3C78027.01

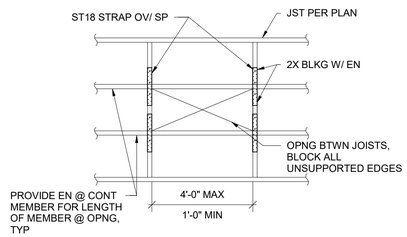

(FOR OPENINGS LESS THAN 1'-0", STRAPS NOT REQUIRED)

10 ROOF OPENING
1/2" = 1'-0"

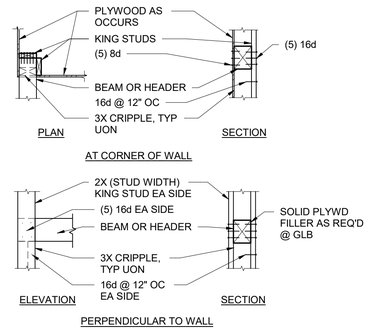

7 BEAM OR HEADER TO WALL
1/2" = 1'-0"

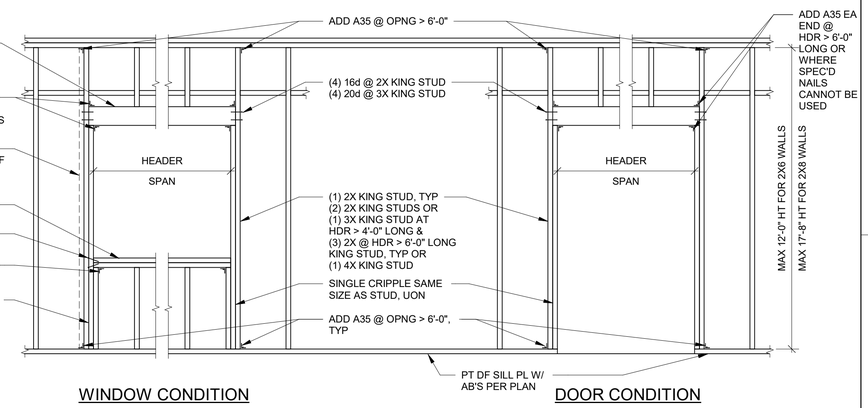

NOTES:
1. SEE PLANS & DETAILS FOR OPNGS > 8'-0" UON.

4 STUD WALL FRAMING
1/2" = 1'-0"

CLIENT

ALAMEDA COUNTY

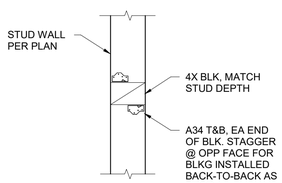

11 WALL BLOCKING AT STUDS
1" = 1'-0"

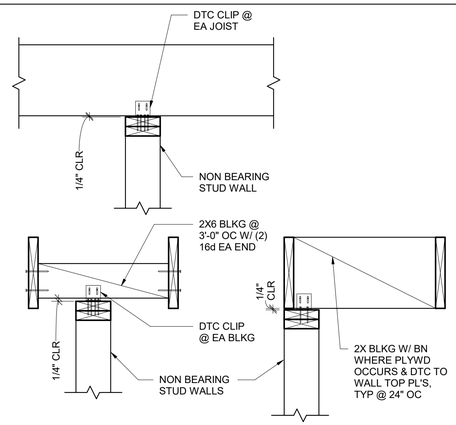

8 NON-BEARING WALL TO JOISTS
NTS

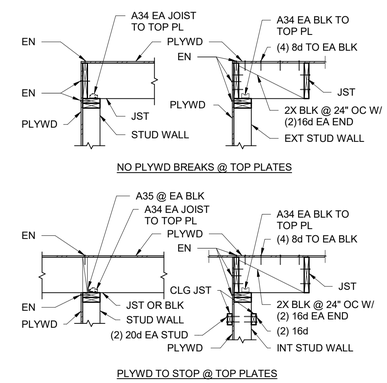

5 SHEAR WALL FRAMING TO JOISTS
1/2" = 1'-0"

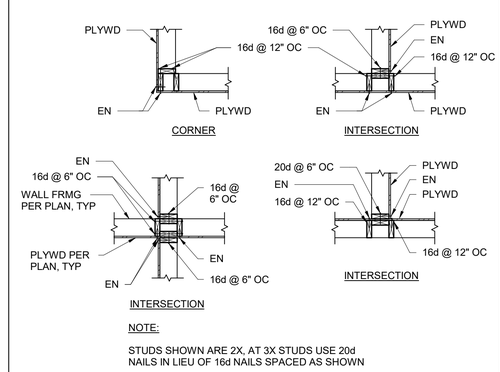

NOTE:

STUDS SHOWN ARE 2X, AT 3X STUDS USE 20d NAILS IN LIEU OF 16d NAILS SPACED AS SHOWN

2 SHEATHED STUD WALL FRAMING DETAILS
1/2" = 1'-0"

NOTE: If this drawing is not 22"x34" it has been revised from its original size and the scales noted on drawing/details are no longer applicable.

© 2022 Shah Kawasaki Architects

Revision Number	DATE	ISSUE DESCRIPTION
1	09/03/2026	PERMIT SET

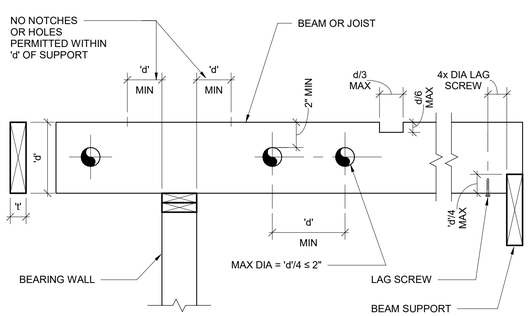

NOTES:
1. HOLES & NOTCHES NOT PERMITTED FOR d=5 1/2" OR LESS
2. NOTCHES NOT PERMITTED WITHIN MIDDLE THIRD OF SPAN.
3. NOTCHES NOT PERMITTED IN BOTTOM OF MEMBER UNLESS SPECIFICALLY SHOWN ON THE STRUCTURAL DRAWINGS OR WRITTEN APPROVAL IS OBTAINED FROM THE OWNER'S REPRESENTATIVE.

12 HOLES AND NOTCHES IN BEAMS AND JOISTS
NTS

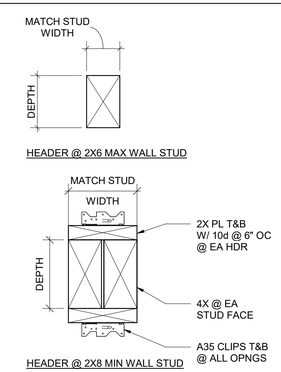

NOTES:
1. HEADERS ARE SOLID, ONE PIECE, SAME WIDTH AS STUDS UP TO 2X6
2. HEADER DEPTH IS 6X UP TO 4'-0" SPAN & 10X UP TO 8'-0" SPAN, UON
3. SEE PLANS FOR SPANS EXCEEDING 8'-0"

6 HEADER DETAIL
NTS

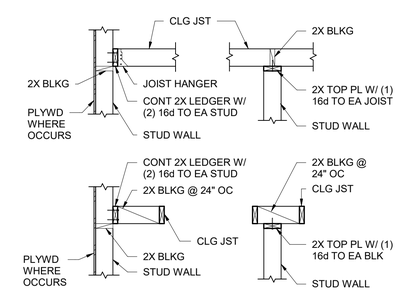

3 STUD WALL FRAMING TO CEILING
1/2" = 1'-0"

Project

WHITECOTTON COTTAGE REHABILITATION

15400 FOOTHILL BLVD
SAN LEANDRO, CA 94578

Architect of Record

P&T

Consultant

Degenkolb
DEGENKOLB ENGINEERS
601 12th Street, Suite 400
Oakland, CA 94607
510.272.9040 PHONE
www.degenkolb.com

REGISTERED PROFESSIONAL ENGINEER
JAY C. YIN
No. 4521
STRUCTURAL
STATE OF CALIFORNIA
9/2/26

Drawing Title

WOOD TYPICAL DETAILS

Drawing No.

S2.00

SKA Project Number: C3C78027.01

SECTION A-A

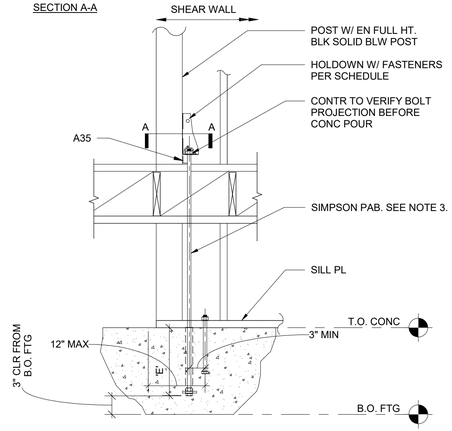

HOLDOWN @ END OF SHEAR WALL

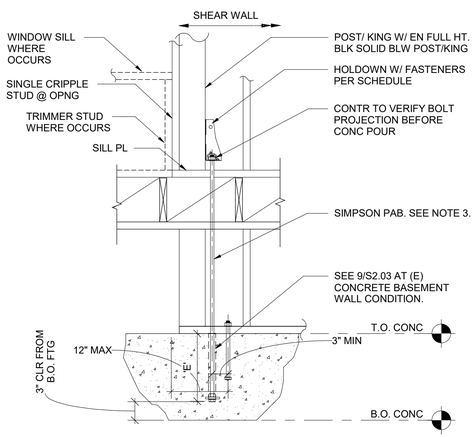

HOLDOWN @ DOOR OR WINDOW

SIMPSON HD NO	FASTENER (NO & TYPE)	HOLDOWN BOLT DIA	MIN POST REQ MATCH STUD WIDTH	EFFECTIVE BOLT EMBED TO CONCRETE, 'E'
HDUE3	(7) ¼x3 SDS	5/8"	4X	12"
HDUE5	(10) ¼x3 SDS	5/8"	4X	12"
HDUE7	(13) ¼x3 SDS	5/8"	4X	18"
HDUE9	(16) ¼x3½ SDS	7/8"	5X	18"

NOTES:
1. HD'S DO NOT SUB FOR SILL BOLTS
2. INSTALL HOLDOWNS PER SIMPSON CATALOG EXCEPT ABOVE DETAILED ANCHOR BOLTS AS REQ'D
3. AT HDUE7, PROVIDE PABH

12 HOLDOWN SCHEDULE
3/4" = 1'-0"

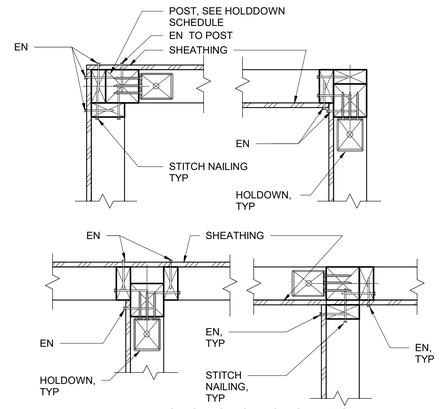

PLAN AT INTERSECTIONS W/ HOLDDOWN

7 HOLDOWN AT SHEAR WALL INTERSECTIONS
NTS

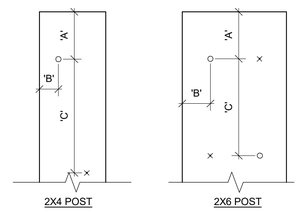

2X4 POST 2X6 POST

MARK	FASTENER DIAMETER	'A'	'B'	'C'
P-1	10d	2 1/2"	1"	6"
P-2	30d	3 1/2"	1 1/2"	8"
P-3	60d	4 3/4"	1 1/2"	8"
P-4	70d	5 1/4"	1 1/2"	8"
P-5	10d	2 1/2"	1"	6"
P-6	30d	3 1/2"	1 1/2"	8"

NOTES:
1) WHERE ONLY ONE LONGITUDINAL ROW OF NAILS IS REQUIRED, ADJACENT NAILS SHALL BE STAGGERED.
2) ADJACENT NAILS ARE DRIVEN FROM OPPOSITE SIDES OF THE COLUMN

8 TYP NAILING SCHEDULE FOR BUILT-UP COLUMN
3" = 1'-0"

MARK	POST SIZE
P-1	2 2X4s
P-2	3 2X4s
P-3	4 2X4s
P-4	5 2X4s
P-5	2 2X6s
P-6	3 2X6s

NOTES:
1) SEE 8/- FOR POST NAILING

9 POST SCHEDULE
1 1/2" = 1'-0"

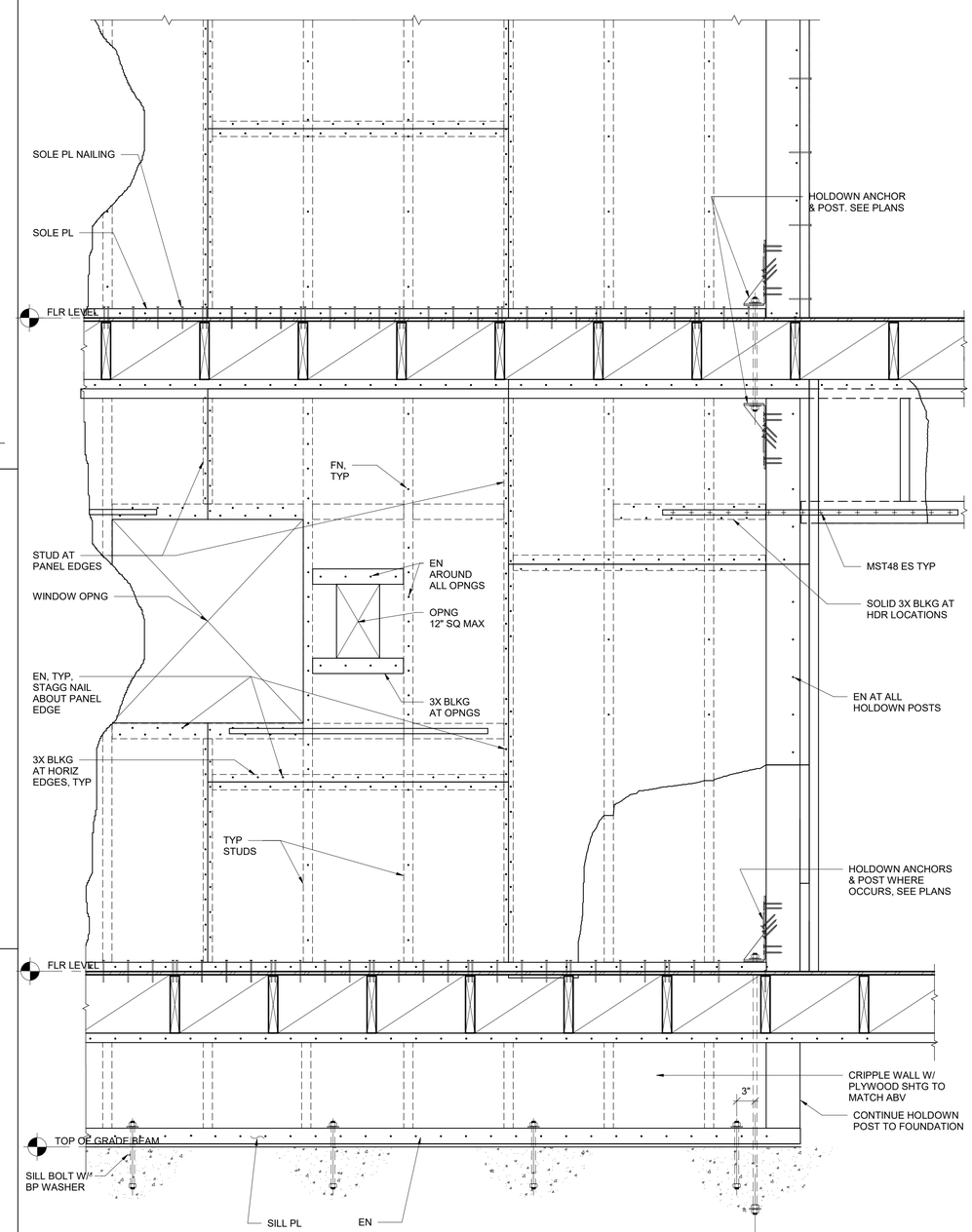

NOTES:
1. INDIVIDUAL PANEL PIECES SHALL NOT BE LESS THAN 2'-0" IN LEAST DIMENSION NOR LESS THAN 8 SQ FT, UON
2. (2) SILL BOLTS MIN PER PIECE W/ 6" MIN & 12" MAX FROM EA END. DO NOT CONSIDER HOLDOWN ANCHOR BOLTS AS SILL BOLTS.
3. PLACE PANELS ON SAME SIDE OF WALL AS SYMBOL SHOWN ON PLAN.
4. FOR WALLS W/ PANELS APPLIED ON BOTH FACES OFFSET PANEL JOINTS TO FALL ON DIFFERENT FRAMING MEMBERS.
5. IF TOP OF CONCRETE IS NOT LEVEL PROVIDE A BED OF NON-SHRINK GROUT BELOW SILL PLATE FOR SOLID BEARING.
6. REFER TO SHEAR WALL DIAGRAM FOR ADDITIONAL REQUIREMENTS.

6 MULTI-STORY SHEAR WALL FRAMING
1" = 1'-0"

CLIENT

ALAMEDA COUNTY

NOTE: If this drawing is not 22"x34" it has been revised from its original size and the scales noted on drawing/details are no longer applicable.

© 2022 Shah Kawasaki Architects

Revision Number	DATE	ISSUE DESCRIPTION
1	09/03/2026	PERMIT SET

Project

WHITECOTTON COTTAGE REHABILITATION

15400 FOOTHILL BLVD
SAN LEANDRO, CA 94578

Architect of Record

P&T

Consultant

Degenkolb
DEGENKOLB ENGINEERS
601 12th Street, Suite 400
Oakland, CA 94607
510.272.9040 PHONE
www.degenkolb.com

REGISTERED PROFESSIONAL ENGINEER
JAY C. YIN
No. 4521
STRUCTURAL
STATE OF CALIFORNIA
9/2/26

Drawing Title
WOOD TYPICAL DETAILS

Drawing No.
S2.01

SKA Project Number: C3C78027.01

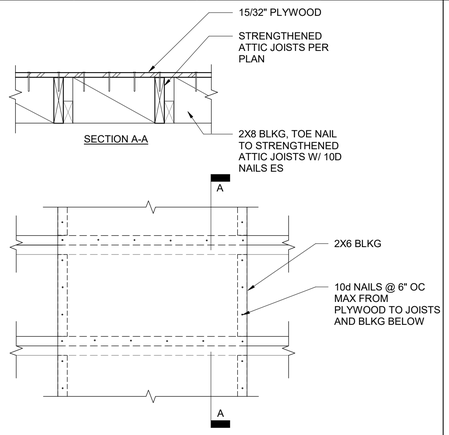

10 CATWALK ATTACHMENT
1" = 1'-0"

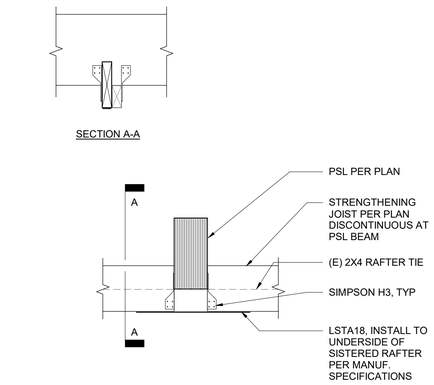

7 ATTIC JOIST AT PSL STRENGTHENING BEAM
1" = 1'-0"

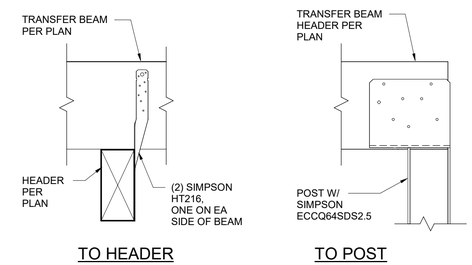

4 TRANSFER BEAM CONNECTIONS
NTS

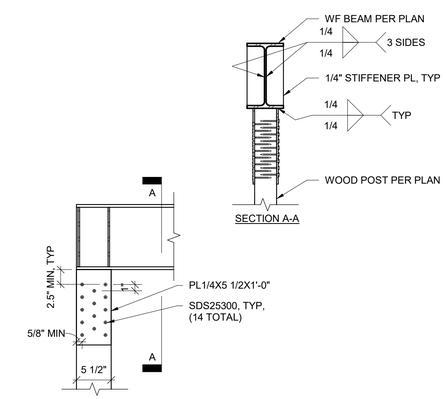

1 STEEL BEAM TO WOOD COLUMN
1" = 1'-0"

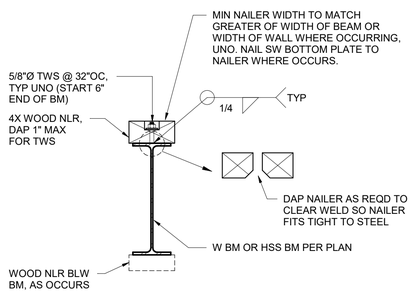

11 WOOD NAILER ON STEEL BEAM
1" = 1'-0"

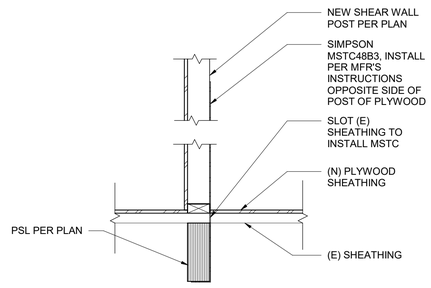

8 SHEAR WALL POST AT TRANSFER BEAM
1" = 1'-0"

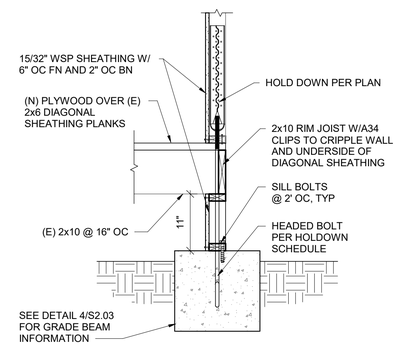

NOTES:
1. SHORE THE BUILDING TO DEMOLISH (E) FOOTING AND BUILD (N) FOOTING

5 CRIPPLE WALL AT EXTERIOR SHEAR WALL
3/4" = 1'-0"

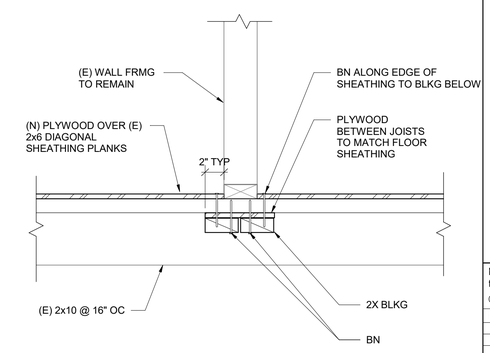

WALL PERPENDICULAR TO JOIST

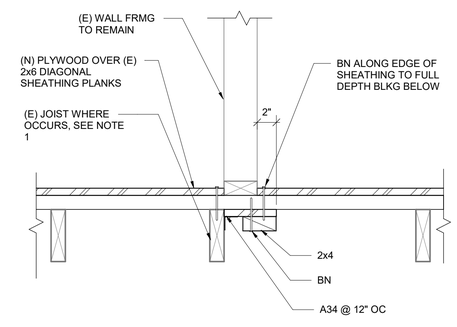

WALL PARALLEL TO JOIST

NOTES:
1. SEE WALL PERPENDICULAR CONDITION WHERE NO JOIST OCCURS

3 (N) PLYWOOD AROUND (E) WALLS
NTS

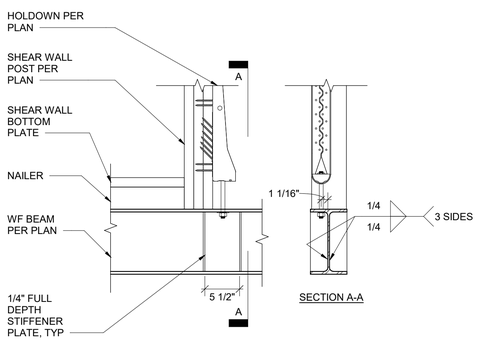

2 HOLDOWN AT STEEL BEAM
1" = 1'-0"

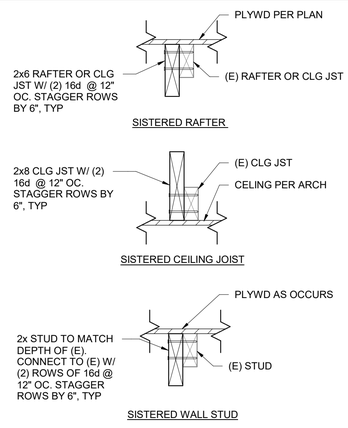

9 TYPICAL SISTERED RAFTER OR JST
1 1/2" = 1'-0"

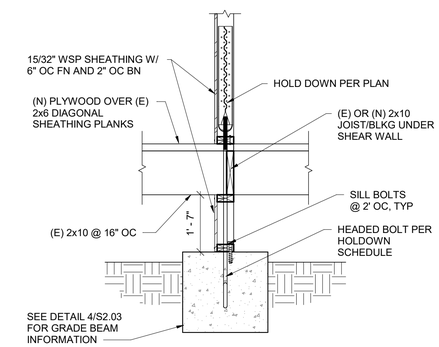

NOTES:
1. SHORE THE BUILDING TO DEMOLISH (E) FOOTING AND BUILD (N) FOOTING

6 CRIPPLE WALL AT INTERIOR SHEAR WALL
3/4" = 1'-0"

CLIENT

GENERAL SERVICES AGENCY GSA COUNTY OF ALAMEDA

ALAMEDA COUNTY

NOTE: If this drawing is not 22"x34" it has been revised from its original size and the scales noted on drawing/details are no longer applicable.

© 2022 Shah Kawasaki Architects

Revision Number	DATE	ISSUE DESCRIPTION
1	09/03/2026	PERMIT SET

Project

WHITECOTTON COTTAGE REHABILITATION

15400 FOOTHILL BLVD
SAN LEANDRO, CA 94578

Architect of Record

P&T

Consultant

Degenkolb

DEGENKOLB ENGINEERS
601 12th Street, Suite 400
Oakland, CA 94607
510.272.9040 PHONE
www.degenkolb.com

REGISTERED PROFESSIONAL ENGINEER
JAY C. YIN
No. 4521
STRUCTURAL
STATE OF CALIFORNIA
9/2/26

Drawing Title

WOOD DETAILS

Drawing No.

S2.02

SKA Project Number: C3C78027.01

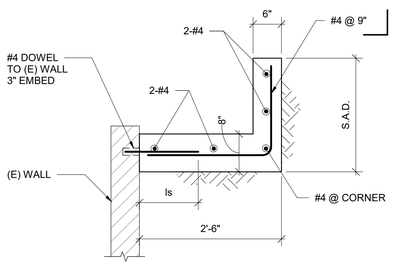

10 SECTI0N
3/4" = 1'-0"

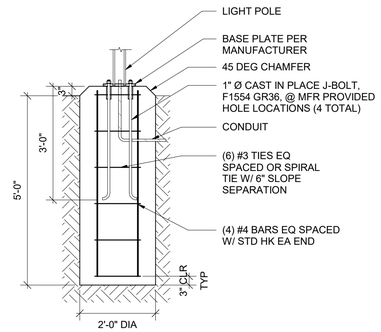

NOTES:
1. TOTAL WEIGHT OF POLE AND LIGHTS NOT TO EXCEED 200 LBS
2. LIGHT POLES NOT TO EXCEED 15' IN HEIGHT

7 LIGHT POLE FOUNDATION
1/2" = 1'-0"

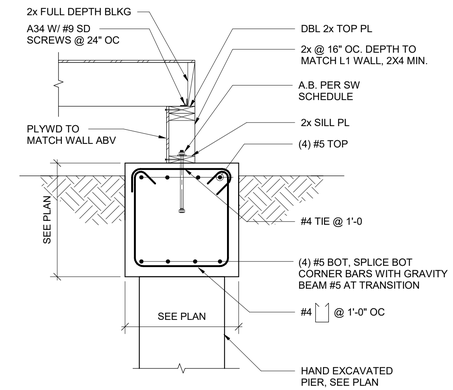

NOTE: DEPTH OF CRIPPLE WALL SHALL MATCH (E) WALL FRMG ABV (4x MIN)

4 GRADE BEAM AT SHEAR WALLS
3/4" = 1'-0"

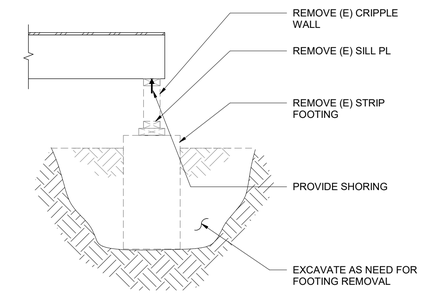

1 TYPICAL FOUNDATION SHORING SCHEMATICS
3/4" = 1'-0"

CLIENT

ALAMEDA COUNTY

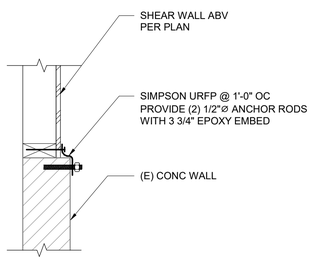

11 DETAIL
1 1/2" = 1'-0"

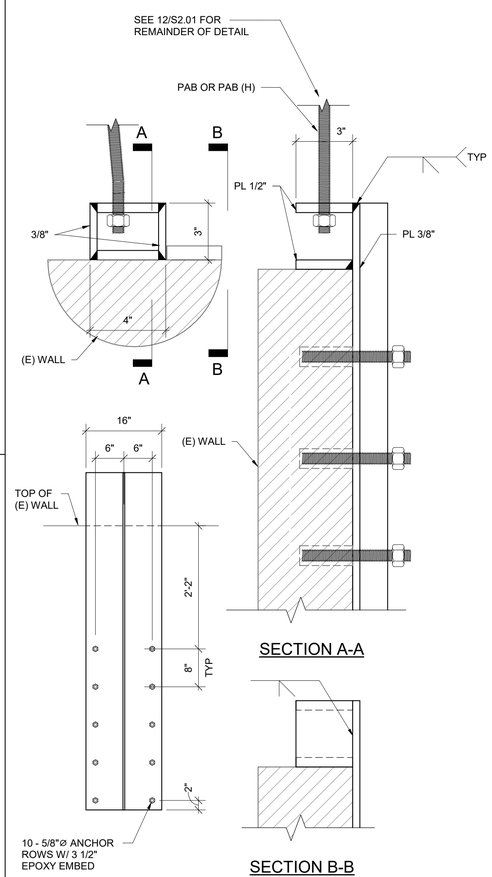

9 DETAIL
3" = 1'-0"

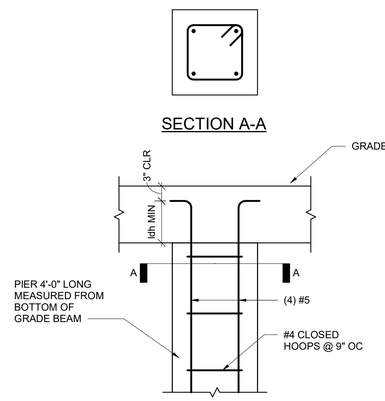

5 TYPICAL HAND EXCAVATED PIER
NTS

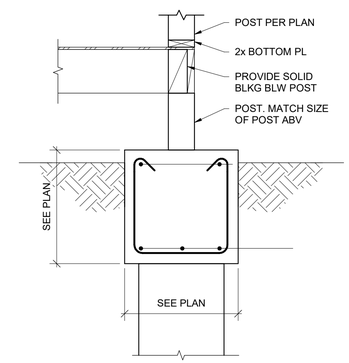

NOTE: SEE 3/- FOR INFO NOT SHOWN

2 TYP GRADE BM @ GRAVITY POST
3/4" = 1'-0"

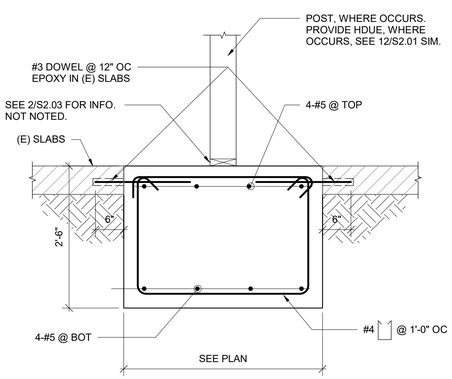

12 DETAIL
3/4" = 1'-0"

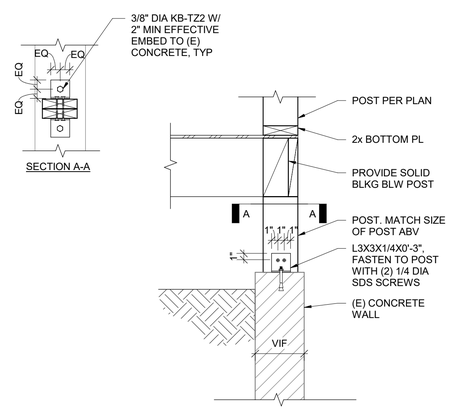

6 GRAVITY POST @ (E) CONC WALL
1" = 1'-0"

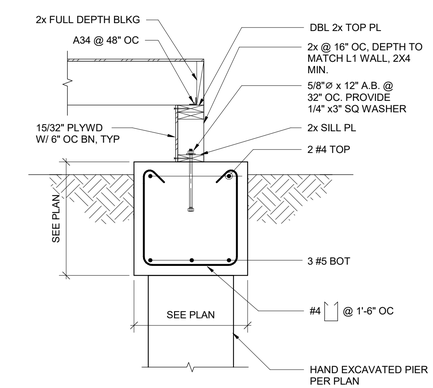

NOTE: DEPTH OF CRIPPLE WALL SHALL MATCH (E) WALL FRMG ABV (4x MIN)

3 TYP GRADE BM W/ NON-SHEAR WALL CRIPPLE WALL
3/4" = 1'-0"

NOTE: If this drawing is not 22"x34" it has been revised from its original size and the scales noted on drawing/details are no longer applicable.

© 2022 Shah Kawasaki Architects

Revision Number	DATE	ISSUE DESCRIPTION
1	09/03/2026	PERMIT SET

Project

WHITECOTTON COTTAGE REHABILITATION

15400 FOOTHILL BLVD
SAN LEANDRO, CA 94578

Architect of Record

P&T

Consultant

Degenkolb
DEGENKOLB ENGINEERS
601 12th Street, Suite 400
Oakland, CA 94607
510.272.9040 PHONE
www.degenkolb.com

REGISTERED PROFESSIONAL ENGINEER
JAY C. YIN
No. 4521
STRUCTURAL
STATE OF CALIFORNIA
9/2/26

Drawing Title
FOUNDATION DETAILS

Drawing No.
S2.03

SKA Project Number: C3C78027.01

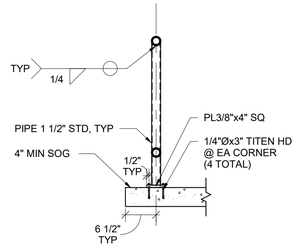

CONCRETE RAMP OR SOG

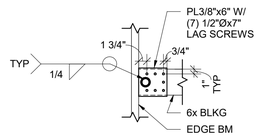

SECTION A-A

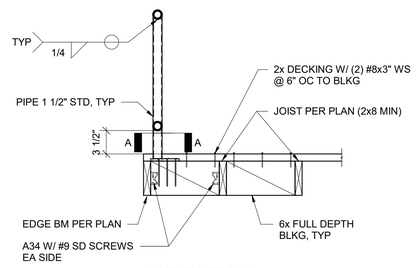

WOOD FRAMED DECK

8 HANDRAIL CONNECTION
3/4" = 1'-0"

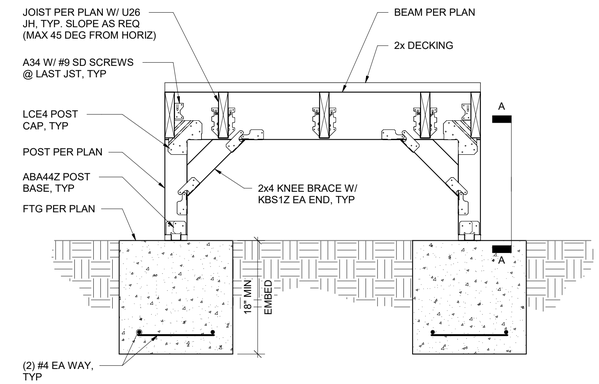

NOTE: GUARDRAIL NOT SHOWN FOR CLARITY. SEE ____ FOR GUARDRAIL CONNECTION

4 TYPICAL RAMP FRAMING
1" = 1'-0"

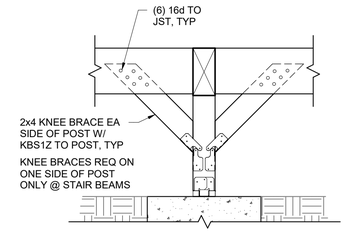

SECTION A-A

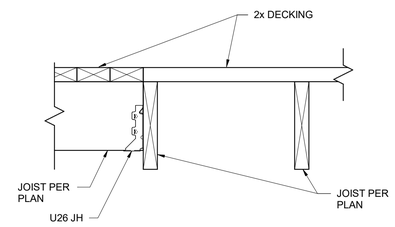

5 JST TO JST
1 1/2" = 1'-0"

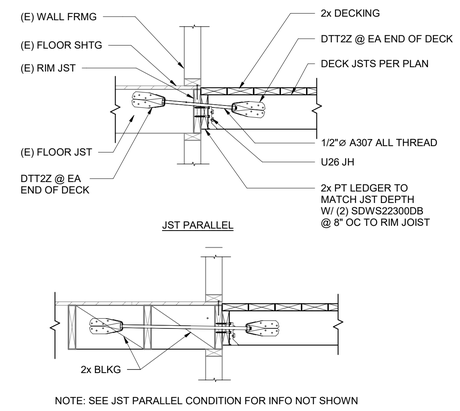

JST PARALLEL

NOTE: SEE JST PARALLEL CONDITION FOR INFO NOT SHOWN

JST PERP

2 DECK LEDGER
3/4" = 1'-0"

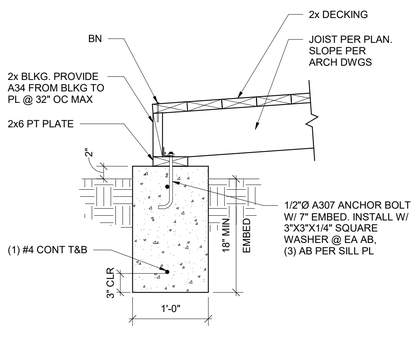

9 JST TO CONT FTG
1" = 1'-0"

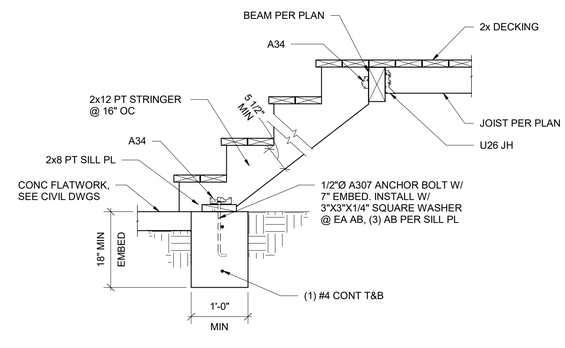

6 DECK STAIRS TO CONC FOOTING
3/4" = 1'-0"

CLIENT

ALAMEDA COUNTY

NOTE: If this drawing is not 22"x34" it has been revised from its original size and the scales noted on drawing/details are no longer applicable.

© 2022 Shah Kawasaki Architects

Revision Number	DATE	ISSUE DESCRIPTION
1	09/03/2026	PERMIT SET

Project

WHITECOTTON COTTAGE REHABILITATION

15400 FOOTHILL BLVD
SAN LEANDRO, CA 94578

Architect of Record

P&T

Consultant

Degenkolb

DEGENKOLB ENGINEERS
601 12th Street, Suite 400
Oakland, CA 94607
510.272.9040 PHONE
www.degenkolb.com

REGISTERED PROFESSIONAL ENGINEER
JAY C. YIN
No. 4521
STRUCTURAL
STATE OF CALIFORNIA
9/2/26

Drawing Title

EXTERIOR RAMP DETAILS

Drawing No.

S2.04

SKA Project Number: C3C78027.01

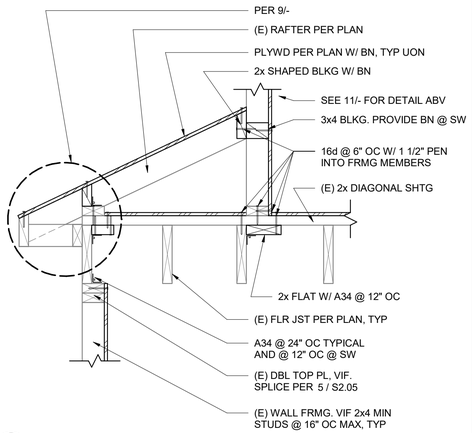

10 RAFTER TO EXT WALL (CONDITION B)
1" = 1'-0"

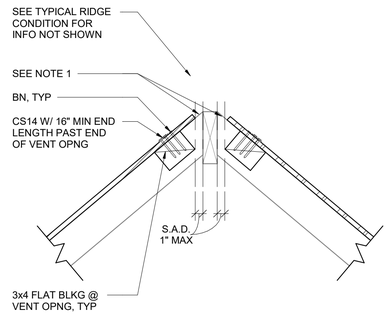

RIDGE @ RIDGE VENT

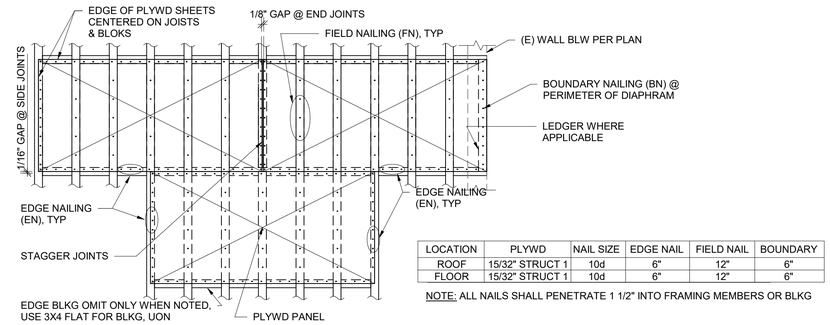

LOCATION	PLYWD	NAIL SIZE	EDGE NAIL	FIELD NAIL	BOUNDARY
ROOF	15/32" STRUCT 1	10d	6"	12"	6"
FLOOR	15/32" STRUCT 1	10d	6"	12"	6"

NOTE: ALL NAILS SHALL PENETRATE 1 1/2" INTO FRAMING MEMBERS OR BLKG

4 PLYWOOD SHEATHING (PLYWD)
NTS

CLIENT

ALAMEDA COUNTY

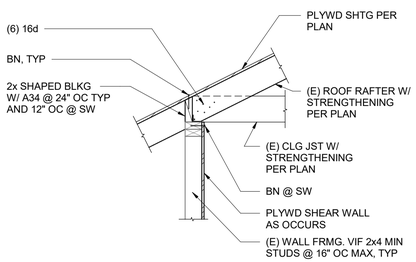

11 RAFTER TO EXT WALL (ABV CONDITION B)
3/4" = 1'-0"

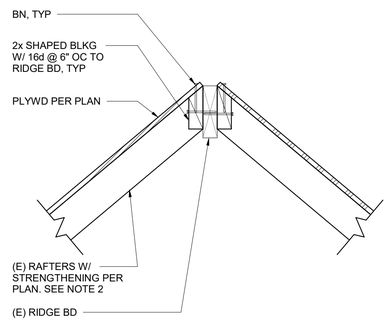

TYPICAL RIDGE

NOTES:
1. S.A.D. FOR LOCATIONS OF RIDGE VENTS. TOTAL LENGTH OF RIDGE VENTS NOT TO EXCEED 10'-0".
2. WHERE (E) RAFTER ALIGNS W/ SW BLW, PROVIDE STRAP @ RIDGE PER 6/-.

8 TYPICAL RIDGE W/ VENTS
1 1/2" = 1'-0"

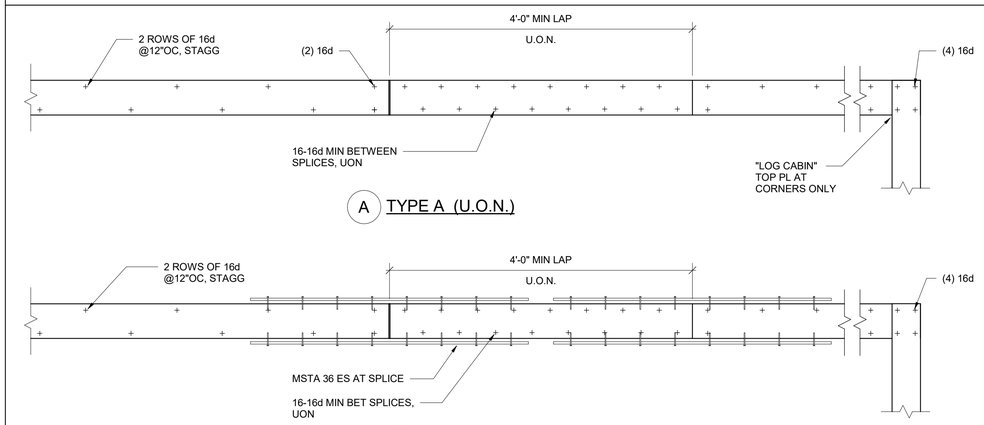

5 TOP PLATE SPLICE
NTS

NOTE: If this drawing is not 22"x34" it has been revised from its original size and the scales noted on drawing/details are no longer applicable.

© 2022 Shah Kawasaki Architects

Revision Number	DATE	ISSUE DESCRIPTION
1	09/03/2026	PERMIT SET

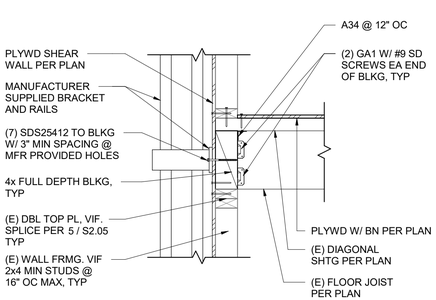

12 ELEVATOR BRACKET CONNECTION
1" = 1'-0"

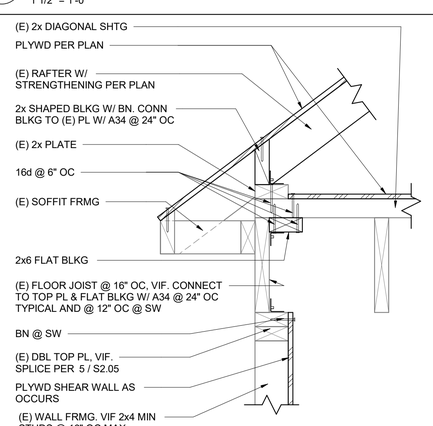

9 RAFTER TO EXT WALL (CONDITION A)
1 1/2" = 1'-0"

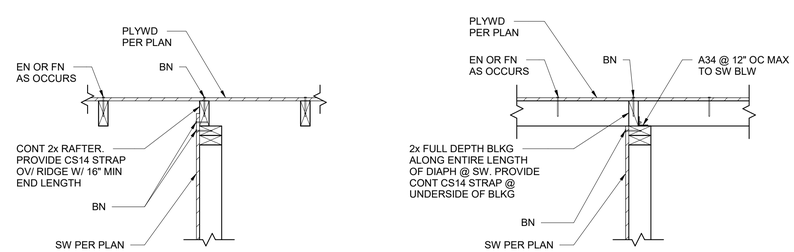

SHEAR WALL PARALLEL TO RAFTER

SHEAR WALL PERP TO RAFTER

6 RAFTERS TO INTERIOR SHEAR WALL
1" = 1'-0"

Project

WHITECOTTON COTTAGE REHABILITATION

15400 FOOTHILL BLVD
SAN LEANDRO, CA 94578

Architect of Record

P&T

Consultant

Degenkolb
DEGENKOLB ENGINEERS
601 12th Street, Suite 400
Oakland, CA 94607
510.272.9040 PHONE
www.degenkolb.com

REGISTERED PROFESSIONAL ENGINEER
JAY C. YIN
No. 4521
STRUCTURAL
STATE OF CALIFORNIA
9/2/26

Drawing Title
WOOD DETAILS

Drawing No.
S2.05

SKA Project Number: C3C78027.01

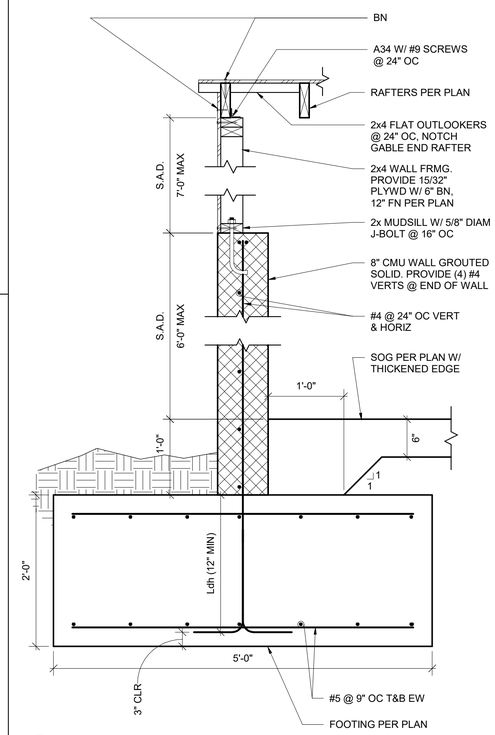

5 TRASH ENCLOSURE - WALL SECTION @ GABLE END
1" = 1'-0"

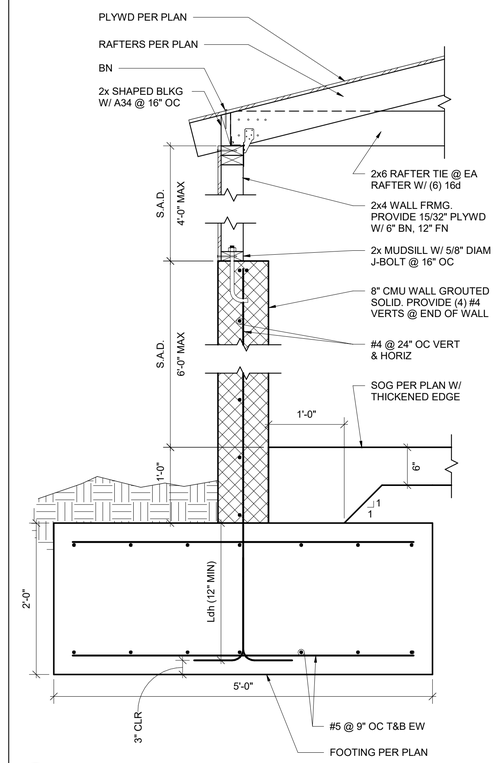

2 TRASH ENCLOSURE - WALL SECTION @ EAVE
1" = 1'-0"

CLIENT

GENERAL SERVICES AGENCY
GSA
COUNTY OF ALAMEDA

ALAMEDA COUNTY

NOTE: If this drawing is not 22"x34" it has been revised from its original size and the scales noted on drawing/details are no longer applicable.

© 2022 Shah Kawasaki Architects

Revision Number	DATE	ISSUE DESCRIPTION
1	09/03/2026	PERMIT SET

Project

WHITECOTTON COTTAGE REHABILITATION

15400 FOOTHILL BLVD
SAN LEANDRO, CA 94578

Architect of Record

P&T

Consultant

Degenkolb

DEGENKOLB ENGINEERS
601 12th Street, Suite 400
Oakland, CA 94607
510.272.9040 PHONE
www.degenkolb.com

REGISTERED PROFESSIONAL ENGINEER
JAY C. YIN
No. 4521
STRUCTURAL
STATE OF CALIFORNIA
9/2/26

Drawing Title

TRASH ENCLOSURE DETAILS

Drawing No.

S2.06

SKA Project Number: C3C78027.01

DEVELOPMENT LENGTH OF STANDARD HK IN TENSION FOR CONCRETE REINFORCEMENT

BAR SIZE	f 'c=3 ksi (NWC)		f 'c=4 ksi (NWC)		f 'c=5 ksi (NWC)		f 'c=6 ksi (NWC)	
	CASE 1	CASE 2	CASE 1	CASE 2	CASE 1	CASE 2	CASE 1	CASE 2
#3	6	9	6	8	6	7	6	6
#4	8	11	7	10	6	9	6	8
#5	10	14	9	12	8	11	7	10
#6	12	17	10	15	9	13	9	12
#7	14	20	12	17	11	15	10	14
#8	16	22	14	19	12	17	11	16
#9	18	25	15	22	14	20	13	18
#10	20	28	17	25	16	22	14	20
#11	22	31	19	27	17	24	16	22
#14	-	38	-	33	-	29	-	27
#18	-	50	-	43	-	39	-	35

NOTES:
1. TABULATED VALUES ARE BASED ON GRADE 60 REINFORCING BARS. FOR GRADE 75 REINFORCING BARS, MULTIPLY THE TABULATED VALUES BY 1.25.
2. CASES 1 AND 2 ARE DEFINED BELOW:
   CASE 1: FOR #11 BARS AND SMALLER HKS WITH SIDE COVER NOT LESS THAN 2.5 INCHES AND COVER ON BAR EXTENSION BEYOND HK NOT LESS THAN 2 INCHES.
   CASE 2: ALL OTHER CASES
3. FOR EPOXY COATED ERINFORCEMENT, MULTIPLY THE TABULATED VALUES BY 1.2
4. FOR LIGHT WEIGHT CONCRETE, MULTIPLY THE TABULATED VALUES BY 1.33.
5. Ldh = HOK DEVELOPMENT LENGTH.

10 DEVELOPMENT LENGTH OF STANDARD HOOK
3/4" = 1'-0"

BAR SIZE	Ld ORLs	f'c = 3000 psi (NWC)				f'c = 4000 psi (NWC)				f'c = 5000 psi (NWC)			
		TOP BARS		OTHER BARS		TOP BARS		OTHER BARS		TOP BARS		OTHER BARS	
		CASE 1	CASE 2	CASE 1	CASE 2	CASE 1	CASE 2	CASE 1	CASE 2	CASE 1	CASE 2	CASE 1	CASE 2
#3	Ld	22	32	17	25	19	28	15	22	17	25	13	19
	Ls	28	42	22	32	24	36	19	28	22	33	17	25
#4	Ld	29	43	22	33	25	37	19	29	22	33	17	26
	Ls	37	56	29	43	32	48	25	37	29	43	22	33
#5	Ld	36	54	28	41	31	47	24	36	28	42	22	32
	Ls	47	70	36	54	40	60	31	47	36	54	28	42
#6	Ld	43	64	33	50	37	56	29	43	33	50	26	38
	Ls	56	84	43	64	48	72	37	56	43	65	33	50
#7	Ld	63	94	48	72	54	81	42	63	49	73	37	56
	Ls	81	122	63	94	70	106	54	81	63	94	49	73
#8	Ld	72	107	55	82	62	93	48	71	55	83	43	64
	Ls	93	139	72	107	80	121	62	93	72	108	55	83
#9	Ld	81	121	62	93	70	105	54	81	63	94	48	72
	Ls	105	157	81	121	91	136	70	105	81	122	63	94
#10	Ld	91	136	70	105	79	118	61	91	70	105	54	81
	Ls	118	177	91	136	102	153	79	118	91	137	70	105
#11	Ld	101	151	78	116	87	131	67	101	78	117	60	90
	Ls	131	196	101	151	113	170	87	131	101	152	78	117
#14	Ld	121	181	93	139	105	157	81	121	94	140	72	108
#18	Ld	161	241	124	186	139	209	107	161	125	187	96	144

NOTES:
1. TABULATED VALUES ARE BASED ON GRADE 60 REINFORCING BARS. FOR GRADE 75 REINFORCING BARS, MULTIPLY THE ABOVE LENGTHS BY 1.25.
2. CASES 1 AND 2 DEPEND ON THE TYPE OF STRUCTURAL MEMBER, CONCRETE COVER, AND CENTER-TO-CENTER SPACING OF THE BARS. THEY ARE DEFINED IN THE FOLLOWING TABLE, WHERE "db" IS BAR DIAMETER:

BEAMS & COLUMNS	CASE 1	CONCRETE COVER AT LEAST 1.0db AND SPACING AT LEAST 2.0db.
	CASE 2	CONCRETE COVER LESS THAN 1.0db OR SPACING LESS THAN 2.0db.
ALL OTHERS	CASE 1	CONCRETE COVER AT LEAST 1.0db AND SPACING AT LEAST 3.0db.
	CASE 2	CONCRETE COVER LESS THAN 1.0db OR SPACING LESS THAN 3.0db.

3. TOP BARS ARE HORIZONTAL BARS WITH MORE THAN 12 INCHES OF CONCRETE CAST BELOW THE BARS.
4. TENSION LAP SPLICES NOT ALLOWED FOR #14 AND #18 BARS.
5. MULTIPLY THE ABOVE LENGTHS BY 1.5 FOR EPOXY COATED REINFORCEMENT.
6. FOR LIGHTWEIGHT AGGREGATE CONCRETE, MULTIPLY THE TABULATED VALUES BY 1.33.
7. Ld = DEVELOPMENT LENGTH

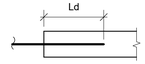

Ls = TYPE 'B' LAP SPLICE LENGTH

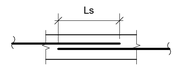

8. WHEN SPLICING BARS OF DIFFERENT SIZE, USE LAP SPLICE LENGTH OF LARGER BAR, UON.

8 REINFORCEMENT DEVELOPMENT & SPLICE LENGTHS
NTS

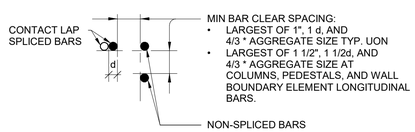

A MIN BAR CLEAR SPACING

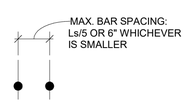

NOTE:
PROVIDE LOCATIONS OF NON-CONTACT SPLICES TO SEOR FOR APPROVAL

B MAX BAR SPACING BETWEEN NON-CONTACT LAP SPLICED BARS

9 SPACING IN CONCRETE
1" = 1'-0"

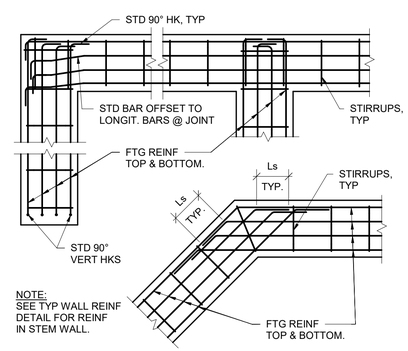

NOTE:
SEE TYP WALL REINF DETAIL FOR REINF IN STEM WALL.

6 FOOTING REINFORCING CORNERS & INTERSECTIONS
3/8" = 1'-0"

STD HKS & BENDS

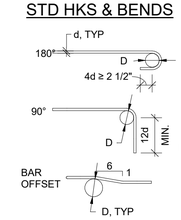

STIRRUPS, TIES & HOOKS

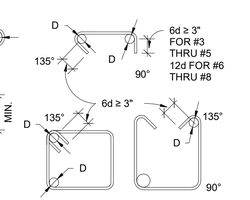

NOTE:
1. DO NOT FIELD BEND REINFORCEMENT PARTIALLY EMBEDDED IN CONCRETE.

BEND DIAMETER, D

BAR SIZE	STD HKS & BENDS	STIRRUPS, TIES & HOOPS
#3 THRU #5	6d	4d
#6 THRU #8	6d	6d
#9 THRU #11	8d	NA
#14 THRU #18	10d	NA

3 REINFORCEMENT HOOKS & BENDS
3/4" = 1'-0"

CLIENT

ALAMEDA COUNTY

NOTE: If this drawing is not 22"x34" it has been revised from its original size and the scales noted on drawing/details are no longer applicable.

© 2022 Shah Kawasaki Architects

Revision Number	DATE	ISSUE DESCRIPTION
1	09/03/2026	PERMIT SET

Project
WHITECOTTON COTTAGE REHABILITATION
15400 FOOTHILL BLVD
SAN LEANDRO, CA 94578

Architect of Record
P&T

Consultant
Degenkolb
DEGENKOLB ENGINEERS
601 12th Street, Suite 400
Oakland, CA 94607
510.272.9040 PHONE
www.degenkolb.com

REGISTERED PROFESSIONAL ENGINEER
JAY C. YIN
No. 4521
STRUCTURAL
STATE OF CALIFORNIA
9/2/26

Drawing Title
TYPICAL CONCRETE DETAILS

Drawing No.
S2.07

SKA Project Number: C3C78027.01

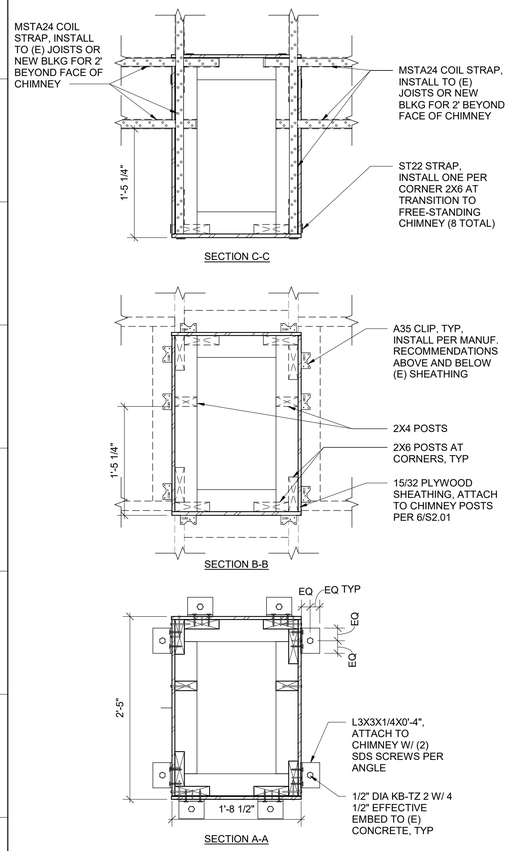

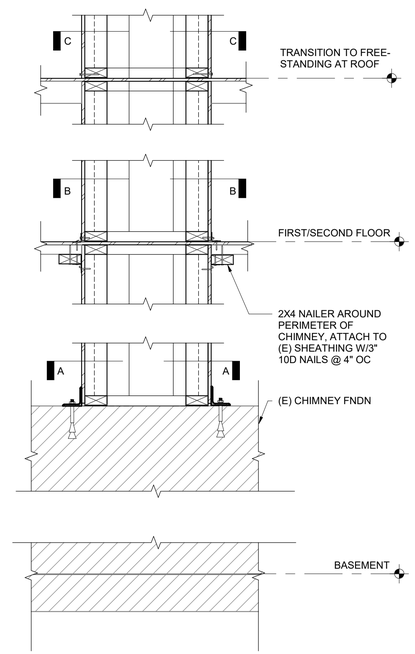

NOTE:
DETAILS AND DIMENSIONS SHOWN ARE BASED OFF ASSUMED CONDITIONS. CONTRACTOR TO EXPOSE (E) CONDITION AND CONTACT SEOR BEFORE PROCEEDING WITH WORK.

11 CHIMNEY
1" = 1'-0"

SCHEDULE OF MINIMUM PERMISSIBLE CONNECTION

DETAILS	FASTENING		
STUDS TO BEARING	2x6 AND SMALLER	2-10d	TOENAILS EACH SIDE (3-10d TOENAILS EACH SIDE WHEN HEIGHT AT EXTERIOR WALLS EXCEEDS 13'-4")
	2x8 AND LARGER	3-10d	TOENAILS EACH SIDE TOP & BOTTOM AT EXTERIOR WALLS (3-16d TOENAILS EACH SIDE WHEN STUD EXCEEDS 20'-0 ")
SOLE PLATES (ON SHEATHING)	PERPENDICULAR TO JOISTS	2-20d	EACH JOIST
	PARALLEL TO JOIST	20d	@ 8" OC STAGGERED
DOUBLE 2" TOP PLATES (USE 30d FOR 3" PLATES)	LOWER PLATE TO STUD	2-20d	FOR 2x6 STUDS OR SMALLER; 3-20d FOR 2x8
	UPPER TO LOWER STAGGERED	16d	@ 12" OC (MIN) LAP 4'-0" WITH 16-16d EACH LAP. SEE PLANS FOR SPECIAL CONDITION.
JOIST OR RAFTERS	LAP AT INTERSECTIONS	3-16d	
	TO BEARING	2-10d	TOENAILS EACH SIDE
	TO SIDE OR EDGE OF STUD	3-16d	FOR 8" DEPTH JOIST OR LESS ADD 1-16d FOR EACH ADDITIONAL 4" IN DEPTH OF JOIST
	TO PARALLELING MEMBERS (PLATES, ETC.)	16d	@ 12" OC
	ALL LAPS (12" MIN)	4-16d	
BLOCKING	TO JOISTS OR RAFTERS	2-10d	TOENAILS EACH SIDE EACH END
	TO BEARINGS	2-10d	TOENAILS EACH SIDE
HERRINGBONE BRIDGING	TO STUDS	2-10d	
CROSS BRIDGING	CROSS BRIDGING	2-8d	
MULTIPLE STUDS	EACH LAYER	16d	@ 8" OC
MULTIPLE STUDS (MULTIPLE JSTS)	EACH LAYER	16d	@ 8" OC FOR BEAMS LESS THAN 10" IN DEPTH ONLY 1/2" DIAMETER BOLTS @ 24" OC STAGGERED FOR BEAMS 10" OR GREATER IN DEPTH
DOUBLE JOIST	WHERE NOT BLOCKED	16d	@ 8" OC STAGGERED
UNDER PARTITIONS	WHERE BLOCKED APART	3-16d	EACH BLOCK EACH SIDE (BLOCKS 2x @ 24" OC)
PLYWD SHEATHING	PLYWD NAILING LOCATION (SEE PLANS & STRUCTURAL SECTIONS)		PLYWD AT LOCATIONS AS INDICATED ON STRUCTURAL DRAWINGS.
3/8" THICKNESS @ ROOF 5/8" THICKNESS @ FLOORS 1/2" THICKNESS @ WALLS	ALL EDGES OF SHEET AND WHERE CALLED OUT "EDGE NAILING" (EN)	* 10d	@ 4"OC
	AT ALL OTHER CONTACTS (FIELD NAILING)	10d	@ 12" OC UON
		10d	@ 10" OC FLOORS
	AT DOUGLAS FIR SILLS	10d	@ 4" OC
	AT REDWOOD SILLS	10d	@ 3" OC
	AT POST WITH HOLDOWN	10d	@ 4" OC

5 NAILING SCHEDULE
1" = 1'-0"

CLIENT

ALAMEDA COUNTY

NOTE: If this drawing is not 22"x34" it has been revised from its original size and the scales noted on drawing/details are no longer applicable.

© 2022 Shah Kawasaki Architects

Revision Number	DATE	ISSUE DESCRIPTION
1	09/03/2026	PERMIT SET

Project

WHITECOTTON COTTAGE REHABILITATION

15400 FOOTHILL BLVD
SAN LEANDRO, CA 94578

Architect of Record

P&T

Consultant

Degenkolb

DEGENKOLB ENGINEERS
601 12th Street, Suite 400
Oakland, CA 94607
510.272.9040 PHONE
www.degenkolb.com

REGISTERED PROFESSIONAL ENGINEER
JAY C. YIN
No. 4521
STRUCTURAL
STATE OF CALIFORNIA
9/2/26

Drawing Title

WOOD DETAILS

Drawing No.

S2.08

SKA Project Number: C3C78027.01

MECHANICAL SYMBOL LIST

NOTE: This is a standard symbol list and not all items listed may be used.

Abbreviations

AFF	ABOVE FINISHED FLOOR
AD	ACCESS DOOR
A/C	AIR CONDITION(ED)
BDD	BACKDRAFT DAMPER
BFF	BELOW FINISHED FLOOR
BHP	BRAKE HORSEPOWER
CD	CEILING DIFFUSER
COP	COEFFICIENT OF PERFORMANCE
CD	CONDENSATE DRAIN
CU	CONDENSING UNIT
CONT.	CONTINUATION
CFM	CUBIC FEET PER MINUTE
DB	DECIBEL
DIA	DIAMETER
DX	DIRECT EXPANSION
D	DROP
DB	DRY BULB
EFF	EFFICIENT
ELECT	ELECTRICAL
EER	ENERGY EFFICIENCY RATING
EAT	ENTERING AIR TEMPERATURE
EXH	EXHAUST
EF	EXHAUST FAN
F	FAHRENHEIT
FC	FAN COIL
FT	FEET
FD	FIRE DAMPER
FLA	FULL LOAD AMPS
HTR	HEATER
HTG	HEATING
HP	HORSEPOWER
IN	INCHES
ID	INSIDE DIAMETER
KW	KILOWATT
LH	LATENT HEAT
LAT	LEAVING AIR TEMPERATURE
MAX	MAXIMUM
MIN	MINIMUM
MA	MIXED AIR
MD	MOTORIZED DAMPER
N/A	NOT APPLICABLE
NTS	NOT TO SCALE
NO.	NUMBER
OA	OUTSIDE AIR
PH	PHASE
LBS.	POUNDS
PD	PRESSURE DROP
QTY	QUANTITY
RA	RETURN AIR
RPM	REVOLUTIONS PER MINUTE
R	RISE
SEER	SEASONAL ENERGY EFFICIENCY RATING
SH	SENSIBLE HEAT
SF	SQUARE FEET
SP	STATIC PRESSURE
SA	SUPPLY AIR
T, TEMP	TEMPERATURE
MBH	THOUSAND BTU'S PER HOUR
UD	UNDERCUT DOOR
V	VOLT
VD	VOLUME DAMPER (HAND OPERATOR)
WC	WATER COLUMN
W	WATT
WB	WET BULB
W/	WITH

Dampers

- FIRE DAMPER
- FIRE/SMOKE DAMPER
- MOTORIZED DAMPER
- SMOKE DAMPER
- VOLUME DAMPER

Diffusers and Grilles

- NECK SIZE / CFM / TAG — DIFFUSER OR GRILLE IDENTIFICATION
- EXHAUST AIR
- RETURN AIR
- SUPPLY AIR

Ductwork Fittings

- ACOUSTICALLY LINED DUCT (SIZES SHOWN ARE NET INSIDE)
- BELLMOUTH
- CONCENTRIC SQUARE TO ROUND
- CONCENTRIC TRANSITION, RECTANGULAR OR ROUND
- ECCENTRIC TRANSITION, RECTANGULAR OR ROUND
- FLEXIBLE CONNECTION
- NON-SYMMETRICAL WYE
- RECTANGULAR DUCT DROP
- RECTANGULAR DUCT RISER
- RECTANGULAR MAIN WITH RECTANGULAR BRANCH
- RECTANGULAR MAIN WITH ROUND BRANCH
- RECTANGULAR OFFSET LESS THAN 15%%d
- RECTANGULAR OFFSET MORE THAN 15%%d
- ROUND DUCT DROP
- ROUND DUCT RISER
- ROUND DUCT WITH ROUND BRANCH
- ROUND WYE
- SYMMETRICAL WYE
- MITERED ELBOW WITH TURNING VANES
- RADIUSED ELBOW

General

- CONTINUATION
- X/X — DETAIL NUMBER AND SHEET LOCATION
- XX-X — EQUIPMENT IDENTIFICATION
- X — KEYED NOTE
- POINT OF CONNECTION
- X/XXX — SECTION NUMBER AND SHEET LOCATION
- 30X16 — RECTANGULAR DUCT SIZING
- 30"Ø — ROUND DUCT SIZING

Piping Fittings, Appurtenances and Equipment

- CAP
- CONTINUATION
- HE — HEAT EXCHANGER
- PIPE DROP
- PIPE RISE
- TEE DOWN ON PIPE
- TEE UP ON PIPE

Piping Systems

- RL — REFRIGERANT LIQUID
- RS — REFRIGERANT SUCTION

Piping Valves

- CHECK VALVE
- VALVE, GENERAL

GENERAL MECHANICAL NOTES

A. PROVIDE MISCELLANEOUS METALS AND MATERIALS FOR A COMPLETE INSTALLATION (IE. SUPPORT, BRACING, ETC.)

B. PROVIDE EQUIPMENT SUBMITTAL, FOR REVIEW, IN ACCORDANCE WITH THE SPECIFICATIONS. DO NOT DELIVER TO THE JOB SITE ANY PRODUCTS WITHOUT PRIOR REVIEW BY THE ARCHITECT. SUBMIT ALL REQUIRED SUBMITTALS AT ONE TIME. AT CONTRACTOR'S OPTION, 3 SEPARATE SUBMITTALS MAY BE SUBMITTED, CONSISTING OF: UNDERGROUND WORK, BUILDING WORK, AND BUILDING AUTOMATION SYSTEM – DEVIATIONS WILL BE RETURNED WITHOUT REVIEW. INCOMPLETE SUBMITTALS WILL BE RETURNED WITHOUT REVIEW. ENGINEER WILL PROVIDE MAXIMUM OF TWO REVIEWS OF SUBMITTAL PACKAGE. ARRANGE FOR ADDITIONAL REVIEWS AND/OR EARLY REVIEW OF LONG-LEAD ITEMS AND BEAR COSTS OF THESE ADDITIONAL REVIEWS AT ENGINEER'S STANDARD HOURLY RATES. SUBSTITUTION REQUESTS WILL NOT BE REVIEWED AFTER AWARD OF CONTRACT.

C. WHERE COMBINATION FIRE AND SMOKE DAMPER IS SHOWN IMMEDIATELY BEHIND A WALL MOUNTED GRILLE AND THERE IS INSUFFICIENT ACCESS AT DUCTWORK, ENLARGE THE WIDTH OF THE GRILLE AND FSD BY A MINIMUM OF 6 INCHES, OR AS OTHERWISE REQUIRED BY FSD MANUFACTURER, AND PROVIDE A "FRONT ACCESS" FSD FOR ACCESS TO FSD COMPONENTS FROM FACE OF GRILLE. INSTALL GRILLE FLUSH WITH WALL SURFACE AND LOCATE DAMPER ACTUATOR OUTSIDE OF THE AIRSTREAM. FSD'S SHALL BE RUSKIN FSD-60FA OR EQUAL.

D. PRIOR TO SUBMISSION OF BID, REVIEW A COMPLETE SET OF CONSTRUCTION DOCUMENTS (INCLUDING ALL OTHER TRADES). INCLUDE ADDITIONAL PIPE OR DUCT OFF-SETS THAT MAY BE REQUIRED TO CLEAR STRUCTURE, FINISHES OR WORK OF OTHER TRADES. FIELD VERIFY EXACT LOCATION AND SIZES OF EXISTING UTILITIES, THE PROPOSED POINT OF CONNECTIONS TO EXISTING SYSTEMS, AND NEW ROUTINGS. EXTRA PAYMENT WILL NOT BE ALLOWED FOR WORK RESULTING FROM LACK OF APPRAISAL OF ENTIRE SCOPE OF WORK PRIOR TO BID. SYSTEM LAYOUTS AS INDICATED ON DRAWINGS ARE GENERALLY DIAGRAMMATIC BUT SHALL BE FOLLOWED AS CLOSELY AS ACTUAL CONSTRUCTION WILL PERMIT.

E. PROVIDE DUCT ACCESS DOORS FOR EQUIPMENT AND DEVICES REQUIRING ACCESS OR RESETTING (IE. FIRE AND SMOKE DAMPERS, SMOKE DAMPERS, SENSORS, ETC.) INDICATE SIZE AND LOCATION ON COORDINATED SHOP DRAWINGS.

F. FLASH AND COUNTER FLASH ALL ROOF PENETRATIONS TO SEAL WEATHER TIGHT (SEE ARCHITECTURAL ROOFING DETAILS AND SPECIFICATIONS).

G. INSTALL EQUIPMENT AND CURBS LEVEL. PROVIDE DUNNAGE, MISCELLANEOUS METALS, AND/OR PRESSURE TREATED LUMBER, AS REQUIRED TO INSTALL EQUIPMENT AND CURBS LEVEL.

H. PROVIDE DUCTWORK AND TRANSITIONS EQUAL TO DUCT FREE AREA SHOWN ON DRAWINGS, TO PREVENT A SPATIAL CONFLICT. AT CONTRACTOR'S OPTION AND IF SPATIAL CONSTRAINTS ALLOW IT, ROUND SPIRAL DUCTWORK, OF EQUAL CROSS-SECTIONAL AREA OR LARGER, MAY BE USED IN LIEU OF RECTANGULAR DUCTWORK WHERE SHOWN ON PLANS.

I. PROVIDE FIELD INSTALLED OR MANUFACTURER'S REFRIGERANT LINE SETS BETWEEN THE SPLIT SYSTEMS' INDOOR AND OUTDOOR COMPONENTS. SIZING, QUANTITY, AND INSTALLATION OF PIPES SHALL BE PER MANUFACTURER'S RECOMMENDATIONS BASED ON ACTUAL FIELD INSTALLED LENGTH. PROVIDE HARD WIRED THERMOSTATS AND CONTROL WIRING IN CONDUIT BETWEEN INDOOR AND OUTDOOR UNITS.

J. EQUIPMENT, HVAC DUCTS, PIPING AND OTHER DEVICES AND MATERIALS INSTALLED OUTDOORS OR EXPOSED TO WEATHER SHALL BE WEATHER-PROOF.

K. USE FLEXIBLE DUCTS ONLY FOR THE LAST 5 FEET MAXIMUM AT AIR OUTLETS. PER 2025 CMC-603.4.1, EXCEPT FOR RESIDENTIAL OCCUPANCIES AND EXCEPT AT AIR OUTLETS DO NOT USE FLEXIBLE DUCTWORK IN LIEU OF ELBOWS OR FITTINGS.

L. PROVIDE MANUAL VOLUME DAMPERS AT EACH GRILLE, REGISTER, AND DIFFUSER, AND LOCATE EQUIDISTANT BETWEEN BRANCH TAKEOFF AND AIR INLET/OUTLET. DO NOT USE VOLUME DAMPERS INTEGRAL WITH GRILLES, DIFFUSERS AND REGISTERS FOR AIR BALANCING.

M. INSTALL EQUIPMENT WITH SUFFICIENT ACCESS TO PANELS, ELECTRICAL CONNECTIONS, CONTROLS, FILTERS, MOTORS, ETC. COORDINATE ACCESS TO ALL DAMPERS, VALVES, AND OTHER SERVICEABLE EQUIPMENT. REVIEW CEILING HEIGHTS AND COORDINATE ACCESS PANEL LOCATIONS.

N. COORDINATE EQUIPMENT PLATFORMS, AND CUTTING AND PATCHING. OBTAIN WRITTEN PERMISSION FROM THE ARCHITECT PRIOR TO ANY STRUCTURAL MODIFICATIONS, CUTTING OR PATCHING WORK. KEEP SAW CUTTING TO A MINIMUM.

O. VERIFY DIFFUSERS, GRILLES, AND REGISTER MOUNTING FRAME TYPES WITH CONSTRUCTION TYPE AND CONFIGURATION.

P. PAINT ALL VISIBLE INTERIOR PORTIONS OF DUCTWORK. COORDINATE COLOR AND FINISH WITH ARCHITECT.

Q. PROTECT AND ISOLATE DUCTS STORED ON CONSTRUCTION SITE FROM DUST CONTAMINATION.

R. COORDINATE LOCATION OF SENSORS AND THERMOSTATS WITH ARCHITECT. COMPLY WITH ADA REQUIREMENTS.

S. "DEMOLISH" OR "REMOVE" MEAN: REMOVE AND RETURN TO OWNER FOR ACCEPTANCE, AND DISPOSE OF ANY ITEMS NOT ACCEPTED BY THE OWNER.

T. PROVIDE REMOTE DAMPER OPERATORS AS MANUFACTURED BY YOUNG REGULATOR COMPANY, MODEL 315 AND 270-275, OR EQUAL, FOR DAMPERS ABOVE INACCESSIBLE CEILINGS (SUCH AS GYPBOARD).

U. COORDINATE WITH DIVISION 26 FOR LOCATION OF POWER AND LOCAL DISCONNECTS FOR MECHANICAL EQUIPMENT DEVICES. PROVIDE STARTERS FOR EQUIPMENT WITHOUT VFD'S, ECM MOTORS, OR EQUIPMENT WITHOUT INTEGRAL STARTERS.

V. ENCLOSE PORTIONS OF A NEGATIVE PRESSURE GAS FLUE WHICH ARE LOCATED IN A NEGATIVE PRESSURE AIR PLENUM/SPACE, IN A CONDUIT OR ENCLOSURE WITH JOINTS BETWEEN THE INTERIOR OF THE ENCLOSURE AND THE CEILING SPACE SEALED.

W. MAINTAIN MINIMUM ELECTRICAL CODE AND UNIT MANUFACTURER'S CLEARANCES TO ADJACENT CONSTRUCTION OR EQUIPMENT, PER CEC OR THE FOLLOWING TABLE:

	0-150 VOLT	150-600
NO LIVE OR GROUNDED PARTS ON OPPOSITE SIDE	36 INCH	36 INCH
GROUNDED PARTS ON OPPOSITE SIDE	36 INCH	42 INCH
LIVE PARTS ON OPPOSITE SIDE	36 INCH	48 INCH

SHEET INDEX

M0.01 SYMBOL LIST AND GENERAL NOTES - MECHANICAL
M0.02 SCHEDULES - MECHANICAL
M0.03 TITLE 24 - MECHANICAL
M0.04 TITLE 24 - MECHANICAL
M0.05 TITLE 24 - MECHANICAL
M0.06 TITLE 24 - MECHANICAL

MD1.00 LEVEL 0 DEMOLITION PLAN - MECHANICAL
MD1.01 LEVEL 1 DEMOLITION PLAN - MECHANICAL
MD1.02 LEVEL 2 DEMOLITION PLAN - MECHANICAL

M1.00 LEVEL 0 PLAN - MECHANICAL
M1.01 LEVEL 1 PLAN - MECHANICAL
M1.02 LEVEL 2 PLAN - MECHANICAL

M3.01 DIAGRAMS - MECHANICAL

M4.01 DETAILS - MECHANICAL
M4.02 DETAILS - MECHANICAL

CLIENT

ALAMEDA COUNTY

INTERFACE ENGINEERING
PROJECT 2025-1084
CONTACT Hugh Kettler
1999 Harrison Street, Suite 550
Oakland, CA 94612
TEL 415.489.7240
www.interfaceengineering.com

NOTE: If this drawing is not 22"x34" it has been revised from its original size and the scales noted on drawing/details are no longer applicable.

© 2022 Shah Kawasaki Architects

Revision Number	DATE	ISSUE DESCRIPTION
	09/03/2026	PERMIT SET

Project

WHITECOTTON COTTAGE REHABILITATION

15400 FOOTHILL BLVD
SAN LEANDRO, CA 94578

Architect of Record

P&T

Consultant

PAGE & TURNBULL
170 MAIDEN LANE, 5TH FLOOR
SAN FRANCISCO, CA

REGISTERED PROFESSIONAL ENGINEER
HUGH KETTLER
NO. M42617
Exp: 06/30/2027
MECHANICAL
STATE OF CALIFORNIA

Drawing Title

SYMBOL LIST AND GENERAL NOTES - MECHANICAL

Drawing No.

M0.01

SKA Project Number: 25001

FAN COIL SCHEDULE (DX)

SYMBOL	AREA SERVED	BASIS OF DESIGN MFR	BASIS OF DESIGN MODEL	UNIT TYPE	ASSOC CU	SUPPLY FAN TOTAL CFM	SUPPLY FAN ESP (IN H2O)	FAN MOTOR WATTS	DX COOLING COIL NOM TONS	DX COOLING COIL TOTAL CAP (MBH)	DX COOLING COIL SENS CAP (MBH)	DX COOLING COIL EDB (°F)	DX COOLING COIL EWB (°F)	HEAT PUMP HTG (MBH)	ELECTRICAL VOLTS	ELECTRICAL PH	ELECTRICAL MCA	ELECTRICAL MOCP	MAX WT (LBS)	NOTES
FCU-1-01	103 - CONF	MITSUBISHI	TPKFYP012	WALL MOUNTED	CU-1	295	-	30	1	10.5	8.3	75.6	62.6	7.6	208	1	0.24	15	25	ALL
FCU-1-02	102 - OFFICE	MITSUBISHI	TPKFYP012	WALL MOUNTED	CU-1	295	-	30	1	10.4	8.7	75.7	61.5	7.6	208	1	0.24	15	25	ALL
FCU-1-03	105 - ELEV LOBBY	MITSUBISHI	TPKFYP008	WALL MOUNTED	CU-1	235	-	30	0.67	7	6.6	77.3	62.2	5	208	1	0.24	15	25	ALL
FCU-1-04	101 - RECEPTION	MITSUBISHI	TPKFYP012	WALL MOUNTED	CU-1	295	-	30	1	10.5	8.3	75.5	62.6	7.6	208	1	0.24	15	25	ALL
FCU-1-05	108 - TRAINING	MITSUBISHI	TPKFYP024	WALL MOUNTED	CU-1	920	-	56	2	20.9	20.9	75.5	62.1	15.1	208	1	0.34	15	46	ALL
FCU-1-06	110 - CONF	MITSUBISHI	TPKFYP018	WALL MOUNTED	CU-1	440	-	30	1.5	15.6	12.9	75.6	61.8	11.2	208	1	0.24	15	29	ALL
FCU-1-07	109 - CONF	MITSUBISHI	TPKFYP015	WALL MOUNTED	CU-1	355	-	30	1.25	13	10.6	75.4	61.5	9.5	208	1	0.24	15	29	ALL
FCU-1-08	104 - IT	MITSUBISHI	TPKFYP012	WALL MOUNTED	CU-1	295	-	30	1	10.5	8.3	75.6	62.6	7.6	208	1	0.24	15	25	ALL
FCU-2-01	205 - BREAK	MITSUBISHI	TPKFYP012	WALL MOUNTED	CU-1	295	-	30	1	10.5	8.3	75.6	62.7	7.6	208	1	0.24	15	25	ALL
FCU-2-02	204 - OFFICE	MITSUBISHI	TPKFYP008	WALL MOUNTED	CU-1	235	-	30	0.67	6.9	6.3	74.9	61.2	5	208	1	0.24	15	25	ALL
FCU-2-03	203 - OFFICE	MITSUBISHI	TPKFYP015	WALL MOUNTED	CU-1	355	-	30	1.25	13	10.7	75.5	61.4	9.5	208	1	0.24	15	29	ALL
FCU-2-04	201 - HALL	MITSUBISHI	TPKFYP024	WALL MOUNTED	CU-1	920	-	56	2	20.8	20.8	75.4	61.6	15.1	208	1	0.34	15	46	ALL
FCU-2-05	202 - MEETING	MITSUBISHI	TPKFYP012	WALL MOUNTED	CU-1	295	-	30	1	10.4	8.6	75.6	62	7.6	208	1	0.24	15	25	ALL
FCU-2-06	208 - OFFICE	MITSUBISHI	TPKFYP030	WALL MOUNTED	CU-1	920	-	56	2.5	26	24.6	75.6	61.4	19	208	1	0.34	15	46	ALL
FCU-2-07	209 - OFFICE	MITSUBISHI	TPKFYP018	WALL MOUNTED	CU-1	440	-	30	1.5	15.5	13.2	75.5	61.2	11.2	208	1	0.24	15	29	ALL
FCU-0-01	ELEVATOR	MITSUBISHI	PEAD-AA09	WALL MOUNTED	CU-2	320	-	121	0.75	9	8.55	75	62	12	208	1	2.13	15	58	1,2

NOTES:
1. PROVIDE WITH EXTERNAL CONDENSATE PUMP.
2. PROVIDE WITH 7-DAY PROGRAMMABLE THERMOSTAT.
3. FAN COILS SHALL COMPLY WITH REQUIREMENTS PER UL FOR R-32 REFRIGERANT SENSING AND SHUTDOWN OF VALVES.

HEAT RECOVERY VRF CONDENSING UNIT SCHEDULE

SYMBOL	AREA SERVED	BASIS OF DESIGN MFR	BASIS OF DESIGN MODEL	AIR SOURCE HEAT RECOVERY CONDENSER TONS NOM TONS	QTY OF COMPRESSORS	COMPRESSOR TYPE	COOLING CAP (MBH)	COOLING AMBIENT DB (°F)	COOLING EER/IEER	HEATING CAP (MBH)	HEATING AMBIENT WB (°F)	HEATING COP	ELECTRICAL VOLTS	ELECTRICAL PH	ELECTRICAL MCA	ELECTRICAL MOCP	MAX WT (LBS)	NOTES
CU-1	LEVELS 1/2	MITSUBISHI	TURYE192	16	1	INVERTER	191	90	11.2/23.2	138.6	37	3.78	208	3	60	100	712	ALL
CU-2	ELEVATOR	MITSUBISHI	SUZ-AA09	0.75	1	INVERTER	9	90	13.2	10.9	37	3.7	208	1	13	20	81	ALL

NOTES:
1. PROVIDE WITH ONBOARD CONTROLS.
2. R-32 REFRIGERANT.

FAN SCHEDULE

SYMBOL	AREA SERVED	BASIS OF DESIGN MFR	BASIS OF DESIGN MODEL	TYPE	DRIVE	AIR FLOW (CFM)	TSP (IN H2O)	ESP (IN H2O)	FAN RPM	MAX RPM	SOUND (SONES)	ELECTRICAL VOLTS	ELECTRICAL PH	ELECTRICAL W	MAX WT (LBS)	NOTES
EF-1-1	RESTROOM	GREENHECK	SP-A200	CEILING	DIRECT	75	0.5	0.4	705	1000	2	115	1	22	24	1,2
EF-1-2	JANITOR	GREENHECK	SP-A200	CEILING	DIRECT	50	0.5	0.4	665	1000	2	115	1	18	24	1,2
EF-2-1	RESTROOM	GREENHECK	SP-A200	CEILING	DIRECT	75	0.5	0.4	705	1000	2	115	1	22	24	1,2
EF-2-2	BREAK	GREENHECK	SP-A200	CEILING	DIRECT	75	0.5	0.4	705	1000	2	115	1	22	24	1,2

NOTES:
1 PROVIDE WITH UNIT MOUNTED VARIABLE SPEED CONTROLLER
2 PROVIDE WITH INTEGRAL BACKDRAFT DAMPER.

VRF BRANCH CONTROLLER SCHEDULE

SYMBOL	AREA SERVED	BASIS OF DESIGN MFR	BASIS OF DESIGN MODEL	ASSOC CU	# OF FAN-COIL CONN.	DRAIN CONN. (IN)	PIPE CONNECTION OUTDOOR UNIT LIQUID (IN)	PIPE CONNECTION OUTDOOR UNIT GAS (IN)	PIPE CONNECTION INDOOR UNIT LIQUID (IN)	PIPE CONNECTION INDOOR UNIT GAS (IN)	ELECTRICAL VOLTS	ELECTRICAL PH	ELECTRICAL MCA	ELECTRICAL MOCP	APPROX. DIMS (LxWxH)	MAX WT (LBS)	NOTES
BC-1	LEVEL 1	MITSUBISHI	CMB-M108NU-MA-SV	CU-1	8	3/4"	7/8"	1-1/8"	SEE DIAGRAMS	SEE DIAGRAMS	208	1	0.13	15	45"x22"x10"	133	1
BC-2	LEVEL 2	MITSUBISHI	CMB-M108NU-MB-SV	CU-1	8	3/4"	7/8"	1-1/8"	SEE DIAGRAMS	SEE DIAGRAMS	208	1	0.13	15	45"x22"x10"	133	1

NOTES:
1 PROVIDE BALL VALVES ON ALL PORTS (SUPPLY AND RETURN) FOR EASE OF MAINTENANCE.

ENERGY RECOVERY UNIT SCHEDULE

SYMBOL	AREA SERVED	BASIS OF DESIGN MFR	BASIS OF DESIGN MODEL	SUPPLY FAN TOTAL CFM	SUPPLY FAN TSP (IN H2O)	SUPPLY FAN FILTER PD (IN H2O)	SUPPLY FAN ESP (IN H2O)	SUPPLY FAN BHP PER FAN	SUPPLY FAN MHP PER FAN	EXHAUST FAN TOTAL CFM	EXHAUST FAN TSP (IN H2O)	EXHAUST FAN ESP (IN H2O)	EXHAUST FAN BHP	EXHAUST FAN MHP	HEAT RECOVERY TYPE	WINTER OA EAT (°F)	WINTER SA LAT (°F)	WINTER RA EAT (°F)	WINTER EA LAT (°F)	SUMMER OA EAT (°F)	SUMMER SA LAT (°F)	SUMMER RA EAT (°F)	SUMMER EA LAT (°F)	FILTER EFF MERV	FILTER FACE VEL (FPM)	FILTER INITIAL PD (IN H2O)	ELECTRICAL VOLTS	ELECTRICAL PH	ELECTRICAL MCA	ELECTRICAL MOCP	MAX WT (LBS)	NOTES
ERV-1	LEVEL 1	SWEGON	CASA R15	800	1.5	0.34	0.5	0.29	0.33	615	700	0.5	0.29	0.33	RX	36.9	60.8	70	42.2	90	79.1	75	87.6	13	362	0.3	208	1	10	15	381	1
ERV-2	LEVEL 2	SWEGON	CASA R7	340	1.33	0.3	0.5	0.12	0.25	265	0.94	0.5	0.15	0.25	RX	36.9	59.1	70	41.5	90	79.9	75	88	13	317	0.1	208	1	10	15	176	1

NOTES:
1 TSP INCLUDES FILTER DP

DIFFUSER, REGISTER AND GRILLE SCHEDULE

SYMBOL	TYPE	FACE	DAMPER	FINISH	BASIS OF DESIGN	NOTES
FG-1	FLOOR GRILLE	SEE PLANS	VD	GRILLE	TITUS CT-TAF-480	1
SG-1	CEILING SUPPLY GRILLE	SEE PLANS	VD	GRILLE	TITUS 350RS	1
RG-1	RETURN GRILLE	SEE PLANS	VD	GRILLE	TITUS 300RL	1

NOTES:
1 COORDINATE COLOR, FINISH, AND MOUNTING DETAILS WITH ARCHITECTURAL PLANS.

CLIENT

ALAMEDA COUNTY

INTERFACE ENGINEERING
PROJECT 2025-1084
CONTACT Hugh Kettler
1999 Harrison Street, Suite 550
Oakland, CA 94612
TEL 415.489.7240
www.interfaceengineering.com

NOTE: If this drawing is not 22"x34" it has been revised from its original size and the scales noted on drawing/details are no longer applicable.
© 2022 Shah Kawasaki Architects

Revision Number	DATE	ISSUE DESCRIPTION
	09/03/2026	PERMIT SET

Project

WHITECOTTON COTTAGE REHABILITATION
15400 FOOTHILL BLVD
SAN LEANDRO, CA 94578

Architect of Record
P&T

Consultant
PAGE & TURNBULL
170 MAIDEN LANE, 5TH FLOOR
SAN FRANCISCO, CA

REGISTERED PROFESSIONAL ENGINEER
HUGH KETTLER
No. M42617
Exp: 06/30/2027
MECHANICAL
STATE OF CALIFORNIA

Drawing Title
SCHEDULES - MECHANICAL

Drawing No.
M0.02

SKA Project Number: 25001

OUTSIDE AIR VENTILATION SCHEDULE - CALIFORNIA MECHANICAL AND ENERGY CODE

OCCUPANCY CATEGORY								2025 CALIFORNIA MECHANICAL CODE					2025 CALIFORNIA ENERGY CODE (PEOPLE)		2025 CALIFORNIA ENERGY CODE (AREA)			
2025 CALIFORNIA MECHANICAL CODE	2025 CALIFORNIA TITLE 24	EQUIPMENT TAG	ROOM	Az FLOOR AREA (SF)	ASHRAE 62.1 OCCUPANT DENSITY DEFAULT (PEOPLE / 1000 SF)	ASHRAE 62.1 NUMBER OF OCCUPANT (# PEOPLE)	Pz ACTUAL NUMBER OF OCCUPANTS (# PEOPLE)	Rp PEOPLE OUTDOOR AIR RATE (CFM/ PERSON)	Ra AREA OUTDOOR RATE (CFM/SF)	Vbz OUTDOOR AIR REQUIRED (CFM)	Ez VENTILATION EFFECTIVENESS NUMBER	Voz CORRECTED OUTDOOR AIR REQUIRED (CFM)	Rp PEOPLE OUTDOOR AIR RATE (CFM/PERSON)	Voz OUTDOOR AIR REQUIRED (CFM)	Ra AREA OUTDOOR RATE (CFM/SF)	Voz OUTDOOR AIR REQUIRED (CFM)	Voz, max OUTDOOR AIR REQUIRED (CFM)	DESIGN OUTDOOR AIR (CFM)
OFFICE BUILDINGS - Office space, h	Office Buildings - Office space	ERV-1	101 - RECEPTION	172	5	1	1	5	0.06	15	1.0	15	15	15	0.15	26	26	30
OFFICE BUILDINGS - Office space, h	Office Buildings - Office space	ERV-1	102 - OPEN OFFICE	257	5	1	1	5	0.06	20	1.0	20	15	15	0.15	39	39	40
GENERAL - Conference/meeting, h	General - Conference/meeting	ERV-1	103 - CONFERENCE	131	50	7	7	5	0.06	43	1.0	43	15	105	0.15	20	105	105
GENERAL - Corridors, h	General - Corridors	ERV-1	105 - LOBBY	95	0	0	0	0	0.06	6	1.0	6	15	0	0.15	14	14	15
GENERAL - Conference/meeting, h	General - Conference/meeting	ERV-1	108 - TRAINING	417	50	21	21	5	0.06	130	1.0	130	15	315	0.15	63	315	315
GENERAL - Conference/meeting, h	General - Conference/meeting	ERV-1	109 - CONFERENCE	97	50	5	5	5	0.06	31	1.0	31	15	75	0.15	15	75	75
GENERAL - Conference/meeting, h	General - Conference/meeting	ERV-1	110 - CONFERENCE	179	50	9	9	5	0.06	56	1.0	56	15	135	0.15	27	135	135
OFFICE BUILDINGS - Occupiable storage rooms, h	Office Buildings - Occupiable storage rooms for dry materials	ERV-1	003 - STORAGE	556	2	1	1	5	0.06	38	1.0	38	15	15	0.15	83	83	85
GENERAL - Corridors, h	General - Corridors	ERV-2	201 - STAIR HALL	246	0	0	0	0	0.06	15	1.0	15	15	0	0.15	37	37	40
GENERAL - Conference/meeting, h	General - Conference/meeting	ERV-2	202 - CONFERENCE	117	50	6	6	5	0.06	37	1.0	37	15	90	0.15	18	90	90
OFFICE BUILDINGS - Office space, h	Office Buildings - Office space	ERV-2	203 - OFFICE	177	5	1	1	5	0.06	16	1.0	16	15	15	0.15	27	27	30
OFFICE BUILDINGS - Office space, h	Office Buildings - Office space	ERV-2	204 - OFFICE	121	5	1	1	5	0.06	12	1.0	12	15	15	0.15	18	18	20
OFFICE BUILDINGS - Break Rooms	Office Buildings - Breakrooms	ERV-2	205 - BREAK ROOM	100	50	5	5	5	0.12	37	1.0	37	15	75	0.15	15	75	75
OFFICE BUILDINGS - Office space, h	Office Buildings - Office space	ERV-2	208 - OPEN OFFICE	387	5	2	2	5	0.06	33	1.0	33	15	30	0.15	58	58	60
OFFICE BUILDINGS - Office space, h	Office Buildings - Office space	ERV-2	209 - OFFICE	149	5	1	1	5	0.06	14	1.0	14	15	15	0.15	22	22	25
																SYSTEM TOTALS (CFM):	**1119**	**1140**

STATE OF CALIFORNIA

Mechanical Systems

CALIFORNIA ENERGY COMMISSION

CERTIFICATE OF COMPLIANCE **NRCC-MCH-E**

This document is used to demonstrate compliance for mechanical systems that are within the scope of the permit application and are demonstrating compliance using the prescriptive path outlined in §140.4, or §141.0(b)2 for alterations.

Project Name:	Whitecotton Cottage Rehabilitation	**Report Page:**	**(Page 1 of 12)**
Project Address:		**Date Prepared:**	2026-08-11T16:40:22-04:00

A. GENERAL INFORMATION

01	Project Location (city)	San Leandro	04	Total Conditioned Floor Area	3200
02	Climate Zone	3	05	Total Unconditioned Floor Area	0
03	Occupancy Types Within Project:		06	# of Stories (Habitable Above Grade)	2

- Office

B. PROJECT SCOPE

This table Includes mechanical systems or components that are within the scope of the permit application and are demonstrating compliance using the prescriptive path outlined in §140.4, §170.2(b) or §141.0(b)2 and §180.2(b)2 for alterations.

01	02	03
Air System(s)	Wet System Components	Dry System Components
☒ Heating Air System	☐ Water Economizer	☐ Air Economizer
☒ Cooling Air System	☐ Pumps	☐ Electric Resistance Heat
☒ Ventilation (including DOAS, ERV, HRV systems)	☐ System Piping	☒ Fan Systems
Mechanical Controls	☐ Cooling Towers	☒ Ductwork (existing to remain, altered or new)
	☐ Chillers	
☒ Mechanical Controls (existing to remain, altered or new)	☐ Boilers	☐ Zonal Systems/ Terminal Boxes

STATE OF CALIFORNIA

Mechanical Systems

CALIFORNIA ENERGY COMMISSION

CERTIFICATE OF COMPLIANCE **NRCC-MCH-E**

Project Name:	Whitecotton Cottage Rehabilitation	**Report Page:**	**(Page 2 of 12)**
		Date Prepared:	2026-08-11T16:40:22-04:00

C. COMPLIANCE RESULTS

Table C will indicate if the project data input into the compliance document is compliant with mechanical requirements. This table is not editable by the user. If this table says "DOES NOT COMPLY" or "COMPLIES with Exceptional Conditions" refer to Table D., or the table indicated as not compliant for guidance.

01		02		03		04		05		06		07		08	09
System Summary §110.1, §110.2, §140.4, §170.2(c), §141.0(b), §180.2(b2)	AND	Pumps §140.4(k), §170.2(c)4I	AND	Fans/Economizers §140.4(c), §140.4(e), §140.4(p), §170.2(c)	AND	System Controls § 110.2, §120.2, §140.4(f), §140.4(r), §170.2(c)	AND	Ventilation §120.1, §160.2	AND	Terminal Box Controls §140.4(d), §170.2(c)4B	AND	Distribution §120.3, §140.4(l), §160.2, §160.3, §141.0(b)2D, §180.2(b)2Bi	AND	Cooling Towers §110.2(e)2	Compliance Results
(See Table F)		(See Table G)		(See Table H)		(See Table I)		(See Table J)		(See Table K)		(See Table L)		(See Table M)	
Yes	AND		AND	Yes	AND	Yes	AND	Yes	AND		AND	Yes	AND		COMPLIES with Exceptional Conditions
Mandatory Measures Compliance (See Table Q for Details)										COMPLIES					

D. EXCEPTIONAL CONDITIONS

This table is auto-filled with uneditable comments because of selections made or data entered in tables throughout the form.

The permit applicant has indicated on Table J that ventilation calculations have been attached or included elsewhere on the plans.

E. ADDITIONAL REMARKS

This table includes remarks made by the permit applicant to the Authority Having Jurisdiction.

CLIENT

GENERAL SERVICES AGENCY COUNTY OF ALAMEDA GSA

ALAMEDA COUNTY

INTERFACE ENGINEERING

PROJECT 2025-1084
CONTACT Hugh Kettler

1999 Harrison Street, Suite 550
Oakland, CA 94612
TEL 415.489.7240
www.interfaceengineering.com

NOTE: If this drawing is not 22"x34" it has been revised from its original size and the scales noted on drawing/details are no longer applicable.

© 2022 Shah Kawasaki Architects

Revision Number	DATE	ISSUE DESCRIPTION
	09/03/2026	PERMIT SET

Project

WHITECOTTON COTTAGE REHABILITATION

15400 FOOTHILL BLVD
SAN LEANDRO, CA 94578

Architect of Record

P&T

Consultant

PAGE & TURNBULL
170 MAIDEN LANE, 5TH FLOOR
SAN FRANCISCO, CA

REGISTERED PROFESSIONAL ENGINEER
HUGH KETTLER
No. M42617
Exp: 06/30/2027
MECHANICAL
STATE OF CALIFORNIA

Drawing Title

TITLE 24 - MECHANICAL

Drawing No.

M0.03

SKA Project Number: 25001

STATE OF CALIFORNIA
Mechanical Systems
CALIFORNIA ENERGY COMMISSION

CERTIFICATE OF COMPLIANCE		NRCC-MCH-E
Project Name: Whitecotton Cottage Rehabilitation	**Report Page:**	**(Page 3 of 12)**
	Date Prepared:	2026-08-11T16:40:22-04:00

F. HVAC SYSTEM SUMMARY (DRY & WET SYSTEMS)

Space Conditioning System Information

01	02	03	04	05	06
System Name	Quantity	System Serving	System Status	Space Type	Utilizing Recovered Heat
CU-1	1	Multi-zone	New	Office	☒
CU-2	1	Single zone	New	All Other Occupancies	☐

Dry System Equipment Sizing (includes air conditioners, condensers, heat pumps, VRF, furnaces and unit heaters and DOAS systems)

01	02	03	04	05	06	07	08	09	10	11
Name or Item Tag	Equipment Category per Tables 110.2, §140.4(a)2 and 170.2(c)3aii	Equipment Type per Tables 110.2 and Title 20	Smallest Size Available [1] §140.4(a) and §170.2(c)1	Equipment Sizing per Mechanical Schedule (kBtu/h) §140.4(a&b), §170.2(c)1 & §170.2(c)2						
				Heating Output [2,3]			Cooling Output [2,3]		Load Calculations [3,4]	
				Per Design (kBtu/h)	Rated (kBtu/h)	Supp. Heating Output (kBtu/h)	Sensible Per Design (kBtu/h)	Rated (kBtu/h)	Total Heating Load (kBtu/h)	Total Sensible Cooling Load (kBtu/h)
CU-1	Variable Refrigerant Flow (with heat recovery)		Yes	138.6	160	0	191	192	158.2	185.7
CU-2	Unitary Heat Pumps (no elec. resistance)	Air-cooled, split (1phase)	Yes	10.9	12	0	8.6	9	6	8

[1]FOOTNOTES: Equipment shall be the smallest size, within the available options of the desired equipment line, necessary to meet the design heating and cooling loads of the building per §140.4(a) and §170.2(c)1. Healthcare facilities are excepted.
[2]It is common practice to show rated output capacity on the equipment schedule. Sensible cooling output comes from specification sheet tables.
[3] If equipment is heating only, leave cooling output and load blank. If equipment is cooling only, leave heating output and load blank.
[4] Authority Having Jurisdiction may ask for load calculations used for compliance per §140.4(b) and §170.2(c).

STATE OF CALIFORNIA
Mechanical Systems
CALIFORNIA ENERGY COMMISSION

CERTIFICATE OF COMPLIANCE		NRCC-MCH-E
Project Name: Whitecotton Cottage Rehabilitation	**Report Page:**	**(Page 4 of 12)**
	Date Prepared:	2026-08-11T16:40:22-04:00

F. HVAC SYSTEM SUMMARY (DRY & WET SYSTEMS)

Dry System Equipment Efficiency (other than Package Terminal Air Conditioners (PTAC) and Package Terminal Heat Pumps (PTHP), DX-DOAS and Dual Fuel Heat Pumps)

01	02	03	04	05	06	07	08	09	10
Name or Item Tag	Size Category (Btu/h)	Heating Mode				Cooling Mode			
		Rating Condition (°F)	Efficiency Unit	Minimum Efficiency Required per Tables 110.2 / Title 20	Design Efficiency	Refrigerant Loop Heat Recovery	Efficiency Unit	Minimum Efficiency Required per Tables 110.2 / Title 20	Design Efficiency
CU-1		47°Fdb/ 43°Fwb OSA	COP		3.78		EER	9.7	11.2
							IEER	0	23.2
CU-2	<65,000		HSPF2	Federal Minimum	11.5		SEER2	FederalMinimum	18.8

Mechanical Heat Recovery§140.4(s)

01	02	03	04	05	06	07
Name or Item Tag	Coincident Peak Cooling Load of All High Load Spaces (kBtu/h)	Design Capacity of All Mechanical Cooling Systems[2] (kBtu/h)	Design Capacity of All Service Water Heating Systems[1] (kBtu/h)	Design Capacity for all space heating systems (kBtu/h)	Simultaneous Mechanical Heat Recovery	
CU-1	191	191	0	136	Not Required	

[1] FOOTNOTES: Excluding systems expected to operate less than 5 hours per week.
[2] FOOTNOTES: If the design includes capacity for future cooling systems, then assume 20% of future systems serve high load spaces.

G. PUMPS

This section does not apply to this project.

STATE OF CALIFORNIA
Mechanical Systems
CALIFORNIA ENERGY COMMISSION

CERTIFICATE OF COMPLIANCE		NRCC-MCH-E
Project Name: Whitecotton Cottage Rehabilitation	**Report Page:**	**(Page 5 of 12)**
	Date Prepared:	2026-08-11T16:40:22-04:00

H. FAN SYSTEMS & AIR ECONOMIZERS

This table is used to demonstrate compliance with prescriptive requirements found in §140.4(c), §140.4(e), §140.4(m), §170.2(c)3, and §170.2(c)4A for fan systems. Fan systems serving only process loads are exempt from these requirements and do not need to be included in Table H.

System Name	ERV-1	Quantity	1	Fan System Status	New	System Zoning	DOAS <1.0 kW	Serving Dwelling Units?	Not Serving Dwelling Units	Fan System Airflow (cfm)	800	Site Elevation	85	Economizer	NA: DOAS with EAHR
01	02	03	04			05		06	07	08	09			10	11
Fan Name or Item Tag	Fan Type	Qty	Component			Airflow through Component (%)		Water Gauge (w.g)	Allowance		Design				
									Component Allowance (watt/cfm)	Fan Allowance (watt/cfm)[3]	Design Electrical Input Power Method			Motor Nameplate Horsepower	Fan Electrical Input Power (kW)
ERV-1		1									Default per Table 140.4-D/141.0-D			<1	0.96
Supply Fan Base Allowance (watt/cfm)			Exhuast/Return/Relief/Transfer Fan Base Allowance(watt/cfm)						Fan System Allowance (kW)[3]				Fan System Electrical Input Power (kW)		0.96
System Name	ERV-2	Quantity	1	Fan System Status	New	System Zoning	DOAS <1.0 kW	Serving Dwelling Units?	Not Serving Dwelling Units	Fan System Airflow (cfm)	340	Site Elevation	85	Economizer	NA: DOAS with EAHR
01	02	03	04			05		06	07	08	09			10	11
Fan Name or Item Tag	Fan Type	Qty	Component			Airflow through Component (%)		Water Gauge (w.g)	Allowance		Design				
									Component Allowance (watt/cfm)	Fan Allowance (watt/cfm)[3]	Design Electrical Input Power Method			Motor Nameplate Horsepower	Fan Electrical Input Power (kW)
ERV-2		1									Default per Table 140.4-D/141.0-D			<1	0.96
Supply Fan Base Allowance (watt/cfm)			Exhuast/Return/Relief/Transfer Fan Base Allowance(watt/cfm)						Fan System Allowance (kW)[3]				Fan System Electrical Input Power (kW)		0.96

STATE OF CALIFORNIA
Mechanical Systems
CALIFORNIA ENERGY COMMISSION

CERTIFICATE OF COMPLIANCE		NRCC-MCH-E
Project Name: Whitecotton Cottage Rehabilitation	**Report Page:**	**(Page 6 of 12)**
	Date Prepared:	2026-08-11T16:40:22-04:00

H. FAN SYSTEMS & AIR ECONOMIZERS

[1] FOOTNOTES: Fans serving spaces with design background noise goals below NC35
[2] Low-turndown single-zone VAV fan system must be capable of and configured to reduce airflow to 50 percent of design airflow and use no more than 30 percent of the design wattage at that airflow. No more than 10 percent of the design load served by the equipment shall have fixed loads.
[3] Fan system allowance includes fan system base allowance.
[4] Filter pressure loss can only be counted once per fan system.
[5] Complex Fan System means a fan system that combines a single cabinet fan system with other supply fans, exhaust fans, or both.
[6] Computer room economizers must meet requirements of §140.9(a) and will be documented on the NRCC-PRC-E document..
[7] Indoor fans meeting the requirements of 140.4(a)3D shall turn off when there is no demand for heating or cooling in the space. At 66% air flow the power draw shall be no more than 51% of the fan power at full fan speed and at 33% airflow the power draw shall be no more than 12% of the fan power at full fan speed.

H. EXHAUST AIR HEAT RECOVERY 140.4(q), 170.2(c)4O

01	02	03	04	05	06	07	08	09	10	11
Fan System Name	Qty	Hours of Operation per Year	Design Supply Airflow Rate	Outdoor Airflow	% Outdoor Air at Full Design Airflow	Exemptions to Exhaust Air Heat Recovery Requirement per §140.4(q) & §170.2(c)4O	Exhaust Air Heat Recovery §140.4(q) & §170.2(c)4O	Type Of Heat Recovery Rating	Required Recovery Ratio	Energy Recovery Bypass
ERV-1	1	< 8,000	800	800	100	No Exemptions Apply	Not Required			
ERV-2	1	< 8,000	340	340	100	No Exemptions Apply	Not Required			

Fan Energy Index (FEI)

01	02	03
Name or Item Tag	FEI Exception	FEI
ERV-1	<1.00 HP or 0.89 kW	
ERV-2	<1.00 HP or 0.89 kW	

CLIENT

GENERAL SERVICES AGENCY GSA COUNTY OF ALAMEDA

ALAMEDA COUNTY

INTERFACE ENGINEERING
PROJECT 2025-1084
CONTACT Hugh Kettler
1999 Harrison Street, Suite 550
Oakland, CA 94612
TEL 415.489.7240
www.interfaceengineering.com

NOTE: If this drawing is not 22"x34" it has been revised from its original size and the scales noted on drawing/details are no longer applicable.
© 2022 Shah Kawasaki Architects

Revision Number	DATE	ISSUE DESCRIPTION
	09/03/2026	PERMIT SET

Project
WHITECOTTON COTTAGE REHABILITATION
15400 FOOTHILL BLVD
SAN LEANDRO, CA 94578

Architect of Record
P&T

Consultant
PAGE & TURNBULL
170 MAIDEN LANE, 5TH FLOOR
SAN FRANCISCO, CA

REGISTERED PROFESSIONAL ENGINEER
HUGH KETTLER
No. M42617
Exp: 06/30/2027
MECHANICAL
STATE OF CALIFORNIA

Drawing Title
TITLE 24 - MECHANICAL

Drawing No.
M0.04

SKA Project Number: 25001

STATE OF CALIFORNIA

Mechanical Systems

CALIFORNIA ENERGY COMMISSION

CERTIFICATE OF COMPLIANCE		NRCC-MCH-E
Project Name: Whitecotton Cottage Rehabilitation	**Report Page:**	**(Page 7 of 12)**
	Date Prepared:	2026-08-11T16:40:22-04:00

I. SYSTEM CONTROLS

This table is used to demonstrate compliance with mandatory controls in §110.2 and §120.2 and prescriptive controls in §140.4(f) and (n), §170.2(c)4D §170.2(c)4L or requirements in §141.0(b)2E §180.2(b)2 for altered space conditioning systems.

01	02	03	04	05	06	07	08	09	10	11	12
System Name	System Zoning	Conditioned Floor Area Being Served (ft^2)	Thermostats §110.2(b) & (c)[1], §120.2(a) §160.3(a)2A or §160.3(b)8 or §141.0(b)2E & §180.2(b)2	Shut-Off Controls §120.2(e) & §160.3(a)2D	Isolation Zone Controls §120.2(g) & §160.3(a)2F	Demand Response §110.12 §120.2(b) & §160.3(a)2B	Supply Air Temp. Reset §140.4(f) & §170.2(c)4D	Window Interlocks per §140.4(n) & §170.2(c)4D	Direct Digital Control (DDC) per §120.2	JA18 Guideline 36 Library Version	Heat Pump Defrost per §160.3(b)7
CU-1	Multi-zone	<= 25,000 ft^2	EMCS	EMCS	NA: Serves < 25k ft^2	NA: PTAC, PTHP, Rm AC, HP	NA: Controls prevent reheat/recool/simultaneous	NA: No operable windows	NA: Alteration in which no DDC is existing	---	NA Heat Pump not serving dwelling units

[1]FOOTNOTES: Gravity gas wall heaters, gravity floor heaters, gravity room heaters, non-central electric heaters, fireplaces or decorative gas appliances, wood stoves are not required to have setback thermostats.

J. VENTILATION AND INDOOR AIR QUALITY

This table is used to demonstrate compliance with mandatory ventilation requirements in §120.1 § 120.2(e)3B § 140.4(p) and § 140.4(q) for all nonresidential and hotel/motel and d:t24refnolink/]160.2, §160.3(a)3D, §170.2(a)4N, 170.2(a)4O for high-rise residential occupancies. For alterations, only ventilation systems being altered within the scope of the permit application need to be documented in this table. In lieu of this table, the required outdoor ventilation rates and airflows may be shown on the plans or the calculations can be presented in a spreadsheet.

01	☒	Check the box if the project is showing ventilation calculations on the plans, or attaching the calculations instead of completing this table.
02	☐	Check this box if the project included Nonresidential, Hotel/Motel Spaces or Multifamily Common Use Spaces
	☐	
03	☐	Check the box if the project is using natural ventilation in any nonresidential or hotel/motel spaces to meet required ventilation rates per §120.1(c)2.

STATE OF CALIFORNIA

Mechanical Systems

CALIFORNIA ENERGY COMMISSION

CERTIFICATE OF COMPLIANCE		NRCC-MCH-E
Project Name: Whitecotton Cottage Rehabilitation	**Report Page:**	**(Page 8 of 12)**
	Date Prepared:	2026-08-11T16:40:22-04:00

K. TERMINAL BOX CONTROLS

This section does not apply to this project.

L. DISTRIBUTION (DUCTWORK and PIPING)

This table is used to show compliance with mandatory pipe insulation requirements found in §120.3 and mandatory requirements found in §120.4(g) for duct sealing.

01	☐	Insulation shall be protected from damage, including that due to sunlight, moisture, equipment maintenance, and wind. Insulation exposed to weather shall be installed with a cover suitable for outdoor service. Insulation covering chilled water piping and refrigerant suction piping located outside the conditioned space shall have a Class I or Class II vapor retarder. All penetrations and joints of which shall be sealed.

Duct Leakage Testing

The answers to the questions below apply to the following duct systems:	ERV Systems	**NR/ Common Use:** Duct leakage testing shall not exceed 6% per NA7.5.3 required for these systems?	No

STATE OF CALIFORNIA

Mechanical Systems

CALIFORNIA ENERGY COMMISSION

CERTIFICATE OF COMPLIANCE		NRCC-MCH-E
Project Name: Whitecotton Cottage Rehabilitation	**Report Page:**	**(Page 9 of 12)**
	Date Prepared:	2026-08-11T16:40:22-04:00

L. DISTRIBUTION (DUCTWORK and PIPING)

	Dwelling Units: Total duct leakage of duct system shall not exceed 12% or duct system to outside shall not exceed 6% per RA3.1.4 required for systems?	---
	Duct leakage testing per CMC Section 603.9.2 required for these systems?	Yes
11	No	The scope of the project includes only duct systems serving healthcare facilities
12	Yes	Duct system provides conditioned air to an occupiable space for a constant volume, single zone, space-conditioning system.
13	Yes	The space conditioning system serves less than 5,000 ft^2 of conditioned floor area.
14	No	The combined surface area of the ducts is more than 25% of the total surface area of the entire duct system:
15	No	The scope of the project includes extending an existing duct system, which is constructed, insulated or sealed with asbestos.
16	No	The scope of the project includes an existing duct system that is documented to have been previously sealed as confirmed through field verification and diagnostic testing in accordance with procedures in the Reference Nonresidential Appendix NA2.
17	Yes	All Ductwork and plenums with pressure class ratings shall be constructed to Seal Class A
18	No	All ductwork is an extension of an existing duct system
19	No	Ductwork serving individual dwelling unit
20		< 25 ft of new or replacement space conditioning ducts installed
21	R-6	Duct Insulation R-value
22	No	Ductwork Existing To Remain
23	No	Duct System Connected To Altered Space Conditioning System

M. COOLING TOWERS

This section does not apply to this project.

STATE OF CALIFORNIA

Mechanical Systems

CALIFORNIA ENERGY COMMISSION

CERTIFICATE OF COMPLIANCE		NRCC-MCH-E
Project Name: Whitecotton Cottage Rehabilitation	**Report Page:**	**(Page 10 of 12)**
	Date Prepared:	2026-08-11T16:40:22-04:00

N. DECLARATION OF REQUIRED CERTIFICATES OF INSTALLATION

Selections have been made based on information provided in previous tables of this document. If any selection needs to be changed, please explain why in Table E Additional Remarks. These documents must be provided to the building inspector during construction and can be found online at https://www.energy.ca.gov/programs-and-topics/programs/building-energy-efficiency-standards/2025-building-energy-efficiency-1

Form/Title
NRCI-MCH-E - Must be submitted for all buildings

O. DECLARATION OF REQUIRED CERTIFICATES OF ACCEPTANCE

Selections have been made based on information provided in previous tables of this document. If any selection needs to be changed, please explain why in Table E Additional Remarks. These documents must be provided to the building inspector during construction and any with "-A" in the form name must be completed through an Acceptance Test Technician Certification Provider (ATTCP). For more information visit: http://www.energy.ca.gov/title24/attcp/providers.html and the drafts can be found online at https://www.energy.ca.gov/programs-and-topics/programs/building-energy-efficiency-standards/2025-building-energy-efficiency-1

Form/Title	Systems/Spaces To Be Field Verified
NRCA-MCH-02-A - Outdoor Air	
NRCA-MCH-11-A Automatic Demand Shed Controls	CU-1
NRCA-MCH-18-A Energy Management Control Systems	CU-1

P. DECLARATION OF REQUIRED CERTIFICATES OF VERIFICATION

There are no NRCV forms required for this project.

CLIENT

ALAMEDA COUNTY

INTERFACE ENGINEERING

PROJECT 2025-1084
CONTACT Hugh Kettler

1999 Harrison Street, Suite 550
Oakland, CA 94612
TEL 415.489.7240
www.interfaceengineering.com

NOTE: If this drawing is not 22"x34" it has been revised from its original size and the scales noted on drawing/details are no longer applicable.

© 2022 Shah Kawasaki Architects

Revision Number	DATE	ISSUE DESCRIPTION
	09/03/2026	PERMIT SET

Project

WHITECOTTON COTTAGE REHABILITATION

15400 FOOTHILL BLVD
SAN LEANDRO, CA 94578

Architect of Record

P&T

Consultant

PAGE & TURNBULL
170 MAIDEN LANE, 5TH FLOOR
SAN FRANCISCO, CA

REGISTERED PROFESSIONAL ENGINEER
HUGH KETTLER
No. M42617
Exp: 06/30/2027
MECHANICAL
STATE OF CALIFORNIA

Drawing Title

TITLE 24 - MECHANICAL

Drawing No.

M0.05

SKA Project Number: 25001

STATE OF CALIFORNIA
Mechanical Systems
CALIFORNIA ENERGY COMMISSION

CERTIFICATE OF COMPLIANCE		NRCC-MCH-E
Project Name: Whitecotton Cottage Rehabilitation	**Report Page:**	**(Page 11 of 12)**
	Date Prepared:	2026-08-11T16:40:22-04:00

Q. MANDATORY MEASURES DOCUMENTATION LOCATION		
This table is used to indicate where mandatory measures are documented in the plan set or construction documentation.		
01		02
Compliance with Mandatory Measures documented through MCH Mandatory Measures Note Block	No	Plan sheet or construction document location
03		04
Mandatory Measure		**Plan sheet or construction document location**
Heating Equipment Efficiency per §110.1, Title 20, and federal minimums		M0.02
Cooling Equipment Efficiency per §110.1, Title 20, and federal minimums		M0.02
Furnace Standby Loss Control per §110.2(d)		N/A
Duct Insulation per §120.4		M0.01
Heat Pump with Supplemental electric Resistance Heater Controls per §110.2(b)		N/A
The air duct and plenum system is designed per §120.4(a)-(f)		M0.01
Kitchen range hoods shall be rated for sound in accordance with Section 7.2 of ASHRAE 62.2		N/A

STATE OF CALIFORNIA
Mechanical Systems
CALIFORNIA ENERGY COMMISSION

CERTIFICATE OF COMPLIANCE		NRCC-MCH-E
Project Name: Whitecotton Cottage Rehabilitation	**Report Page:**	**(Page 12 of 12)**
Project Address:	**Date Prepared:**	2026-08-11T16:40:22-04:00

DOCUMENTATION AUTHOR'S DECLARATION STATEMENT

I certify that this Certificate of Compliance documentation is accurate and complete.

Documentation Author Name: Hugh Kettler	Documentation Author Signature: Hugh Kettler
Company: Interface Engineering, Inc.	Signature Date: 09/02/2026
Address: 601 S Figueroa St, Suite 2750	CEA/AEA/ECC Certification Identification (if applicable):
City/State/Zip: Los Angeles, CA 90017	Phone: 213.694.3412

RESPONSIBLE PERSON'S DECLARATION STATEMENT

I certify the following under penalty of perjury, under the laws of the State of California:

1. The information provided on this Certificate of Compliance is true and correct.
2. I am eligible under Division 3 of the Business and Professions Code to accept responsibility for the building design or system design identified on this Certificate of Compliance (responsible designer)
3. The energy features and performance specifications, materials, components, and manufactured devices for the building design or system design identified on this Certificate of Compliance conform to the requirements of Title 24, Part 1 and Part 6 of the California Code of Regulations.
4. The building design features or system design features identified on this Certificate of Compliance are consistent with the information provided on other applicable compliance documents, worksheets, calculations, plans and specifications submitted to the enforcement agency for approval with this building permit application.
5. I will ensure that a completed signed copy of this Certificate of Compliance shall be made available with the building permit(s) issued for the building, and made available to the enforcement agency for all applicable inspections. I understand that a completed signed copy of this Certificate of Compliance is required to be included with the documentation the builder provides to the building owner at occupancy.

Responsible Person Name: Hugh Kettler	Responsible Person Signature: Hugh Kettler
Responsible Person Scope:	
Company: Interface Engineering, Inc.	Date Signed: 09/02/2026
Address: 601 S Figueroa St, Suite 2750	License: M42617
City/State/Zip: Los Angeles, CA 90017	Phone: 213.694.3412

CLIENT

GENERAL SERVICES AGENCY
GSA
COUNTY OF ALAMEDA

ALAMEDA COUNTY

INTERFACE ENGINEERING

PROJECT 2025-1084
CONTACT Hugh Kettler

1999 Harrison Street, Suite 550
Oakland, CA 94612
TEL 415.489.7240
www.interfaceengineering.com

NOTE: If this drawing is not 22"x34" it has been revised from its original size and the scales noted on drawing/details are no longer applicable.

© 2022 Shah Kawasaki Architects

Revision Number	DATE	ISSUE DESCRIPTION
	09/03/2026	PERMIT SET

Project

WHITECOTTON COTTAGE REHABILITATION

15400 FOOTHILL BLVD
SAN LEANDRO, CA 94578

Architect of Record

P&T

Consultant

PAGE & TURNBULL
170 MAIDEN LANE, 5TH FLOOR
SAN FRANCISCO, CA

REGISTERED PROFESSIONAL ENGINEER
HUGH KETTLER
NO. M42617
Exp: 06/30/2027
MECHANICAL
STATE OF CALIFORNIA

Drawing Title

TITLE 24 - MECHANICAL

Drawing No.

M0.06

SKA Project Number: 25001

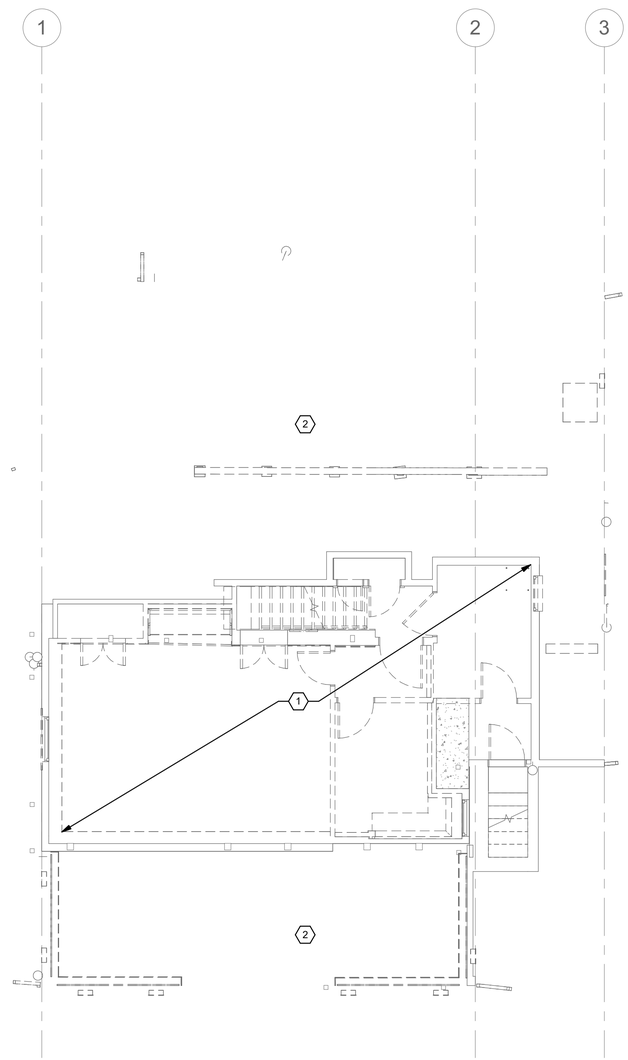

1 LEVEL 0 DEMOLITION PLAN - MECHANICAL

0' 4' 8' 16'
3/16" = 1'-0"

SHEET KEYNOTES

1. EXISTING CRAWL SPACE VENTILATION LOUVERS TO REMAIN.
2. REMOVE ALL EXISTING INDOOR MECHANICAL DUCTWORK, PIPING, AND EQUIPMENT, AND ANY ASSOCIATED WIRING AND CONTROLS.

CLIENT

GENERAL SERVICES AGENCY GSA COUNTY OF ALAMEDA

ALAMEDA COUNTY

INTERFACE ENGINEERING
PROJECT 2025-1084
CONTACT Hugh Kettler
1999 Harrison Street, Suite 550
Oakland, CA 94612
TEL 415.489.7240
www.interfaceengineering.com

NOTE: If this drawing is not 22"x34" it has been revised from its original size and the scales noted on drawing/details are no longer applicable.

© 2022 Shah Kawasaki Architects

Revision Number	DATE	ISSUE DESCRIPTION
	09/03/2026	PERMIT SET

Project

WHITECOTTON COTTAGE REHABILITATION

15400 FOOTHILL BLVD
SAN LEANDRO, CA 94578

Architect of Record

P&T

Consultant

PAGE & TURNBULL
170 MAIDEN LANE, 5TH FLOOR
SAN FRANCISCO, CA

REGISTERED PROFESSIONAL ENGINEER
HUGH KETTLER
No. M42617
Exp: 06/30/2027
MECHANICAL
STATE OF CALIFORNIA

Drawing Title

LEVEL 0 DEMOLITION PLAN - MECHANICAL

Drawing No.

MD1.00

SKA Project Number: 25001

SHEET KEYNOTES

1. REMOVE ALL EXISTING MECHANICAL DUCTWORK, PIPING, AND EQUIPMENT, AND ANY ASSOCIATED WIRING AND CONTROLS.

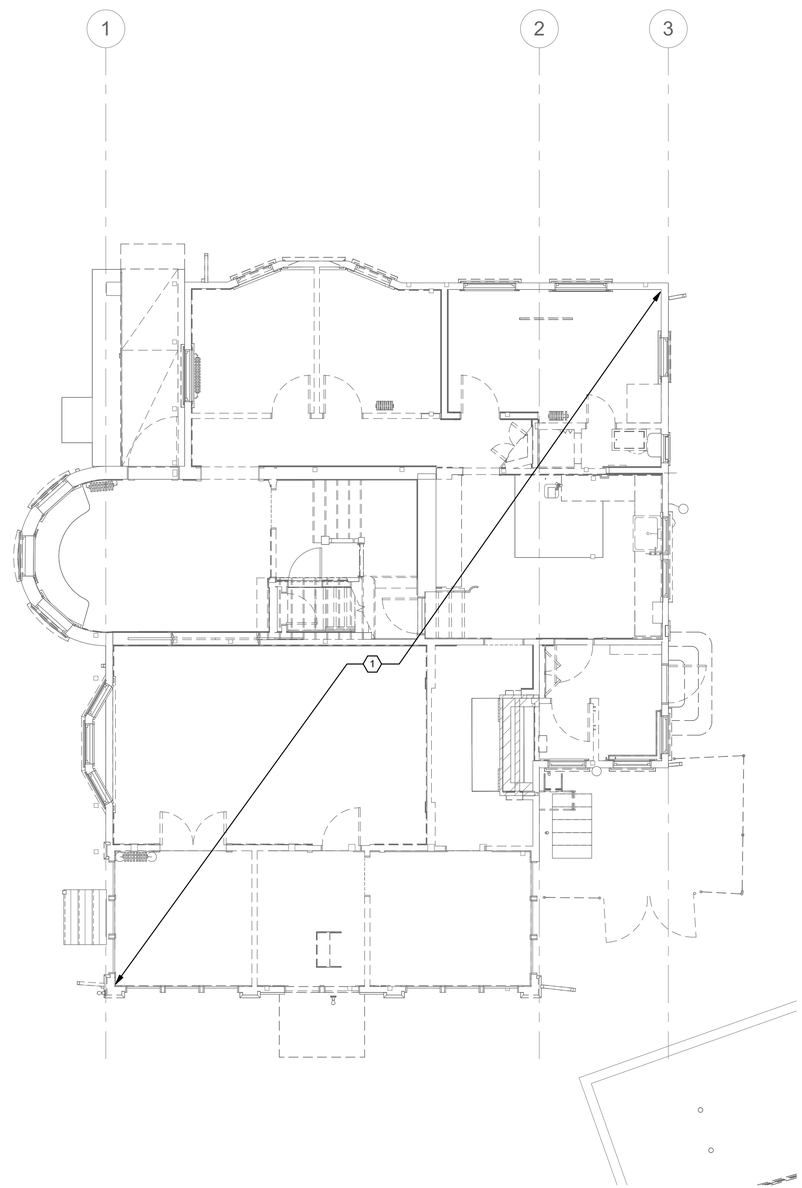

1 LEVEL 1 DEMOLITION PLAN - MECHANICAL

0' 4' 8' 12'
3/16" = 1'-0"

CLIENT

GENERAL SERVICES AGENCY
GSA
COUNTY OF ALAMEDA

ALAMEDA COUNTY

INTERFACE ENGINEERING

PROJECT 2025-1084
CONTACT Hugh Kettler

1999 Harrison Street, Suite 550
Oakland, CA 94612
TEL 415.489.7240
www.interfaceengineering.com

NOTE: If this drawing is not 22"x34" it has been revised from its original size and the scales noted on drawing/details are no longer applicable.

© 2022 Shah Kawasaki Architects

Revision Number	DATE	ISSUE DESCRIPTION
	09/03/2026	PERMIT SET

Project

WHITECOTTON COTTAGE REHABILITATION

15400 FOOTHILL BLVD
SAN LEANDRO, CA 94578

Architect of Record

P&T

Consultant

PAGE & TURNBULL
170 MAIDEN LANE, 5TH FLOOR
SAN FRANCISCO, CA

REGISTERED PROFESSIONAL ENGINEER
HUGH KETTLER
No. M42617
Exp: 06/30/2027
MECHANICAL
STATE OF CALIFORNIA

Drawing Title

LEVEL 1 DEMOLITION PLAN - MECHANICAL

Drawing No.

MD1.01

SKA Project Number: 25001

SHEET KEYNOTES

1. REMOVE ALL EXISTING MECHANICAL DUCTWORK, PIPING, AND EQUIPMENT, AND ANY ASSOCIATED WIRING AND CONTROLS.

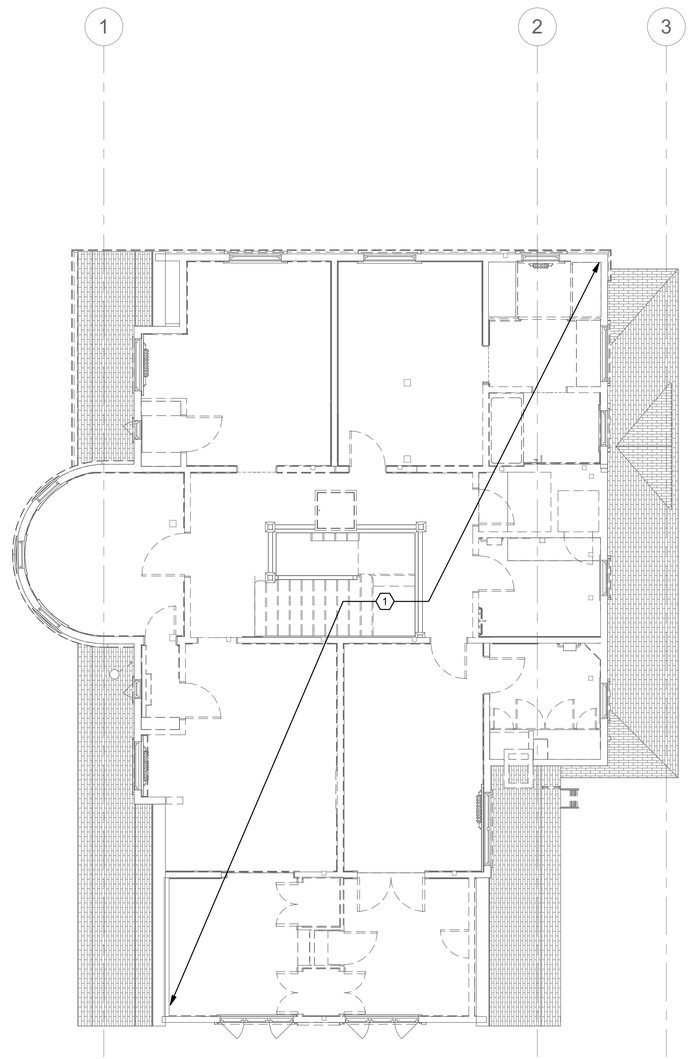

1 LEVEL 2 DEMOLITION PLAN - MECHANICAL

0' 4' 8' 12'

3/16" = 1'-0"

CLIENT

GENERAL SERVICES AGENCY
GSA
COUNTY OF ALAMEDA

ALAMEDA COUNTY

INTERFACE ENGINEERING

PROJECT 2025-1084
CONTACT Hugh Kettler

1999 Harrison Street, Suite 550
Oakland, CA 94612
TEL 415.489.7240
www.interfaceengineering.com

NOTE: If this drawing is not 22"x34" it has been revised from its original size and the scales noted on drawing/details are no longer applicable.

© 2022 Shah Kawasaki Architects

Revision Number	DATE	ISSUE DESCRIPTION
	09/03/2026	PERMIT SET

Project

WHITECOTTON COTTAGE REHABILITATION

15400 FOOTHILL BLVD
SAN LEANDRO, CA 94578

Architect of Record

P&T

Consultant

PAGE & TURNBULL
170 MAIDEN LANE, 5TH FLOOR
SAN FRANCISCO, CA

REGISTERED PROFESSIONAL ENGINEER
HUGH KETTLER
No. M42617
Exp: 06/30/2027
MECHANICAL
STATE OF CALIFORNIA

Drawing Title

LEVEL 2 DEMOLITION PLAN - MECHANICAL

Drawing No.

MD1.02

SKA Project Number: 25001

SHEET KEYNOTES

1. OUTSIDE AIR INTAKE LOUVER WITH AT LEAST 1.5 SQ. FT. OF FREE AREA. BOTTOM OF LOUVER MINIMUM 12" ABOVE GRADE. LOUVER MINIMUM 10' FROM EXHAUST LOUVER.
2. EXHAUST LOUVER WITH AT LEAST 0.85 SQ. FT. OF FREE AREA. MINIMUM 3' FROM BUILDING OPENINGS.
3. SUPPLY AND RETURN SERVING BOTTOM OF ELEVATOR SHAFT. COORDINATE WITH ARCHITECTURAL AND STRUCTURAL DRAWINGS.

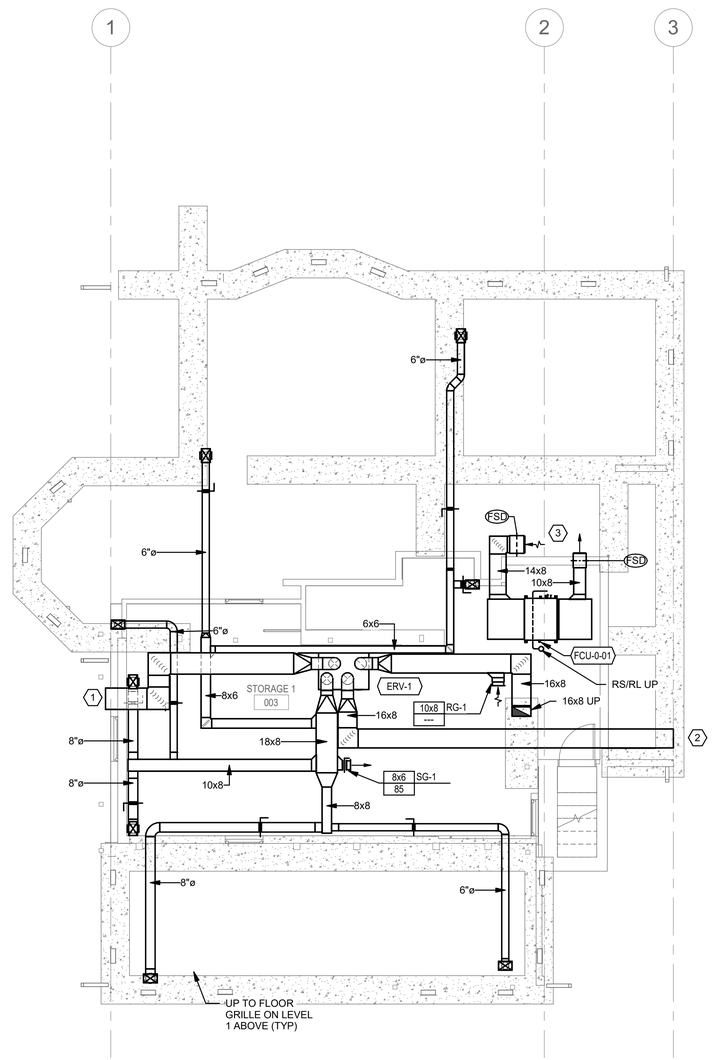

1 LEVEL 0 PLAN - MECHANICAL

0' 4' 8' 16'

3/16" = 1'-0"

CLIENT

GENERAL SERVICES AGENCY GSA COUNTY OF ALAMEDA

ALAMEDA COUNTY

INTERFACE ENGINEERING

PROJECT 2025-1084
CONTACT Hugh Kettler

1999 Harrison Street, Suite 550
Oakland, CA 94612
TEL 415.489.7240
www.interfaceengineering.com

NOTE: If this drawing is not 22"x34" it has been revised from its original size and the scales noted on drawing/details are no longer applicable.

© 2022 Shah Kawasaki Architects

Revision Number	DATE	ISSUE DESCRIPTION
	09/03/2026	PERMIT SET

Project

WHITECOTTON COTTAGE REHABILITATION

15400 FOOTHILL BLVD
SAN LEANDRO, CA 94578

Architect of Record

P&T

Consultant

PAGE & TURNBULL
170 MAIDEN LANE, 5TH FLOOR
SAN FRANCISCO, CA

REGISTERED PROFESSIONAL ENGINEER
HUGH KETTLER
No. M42617
Exp: 06/30/2027
MECHANICAL
STATE OF CALIFORNIA

Drawing Title

LEVEL 0 PLAN - MECHANICAL

Drawing No.

M1.00

SKA Project Number: 25001

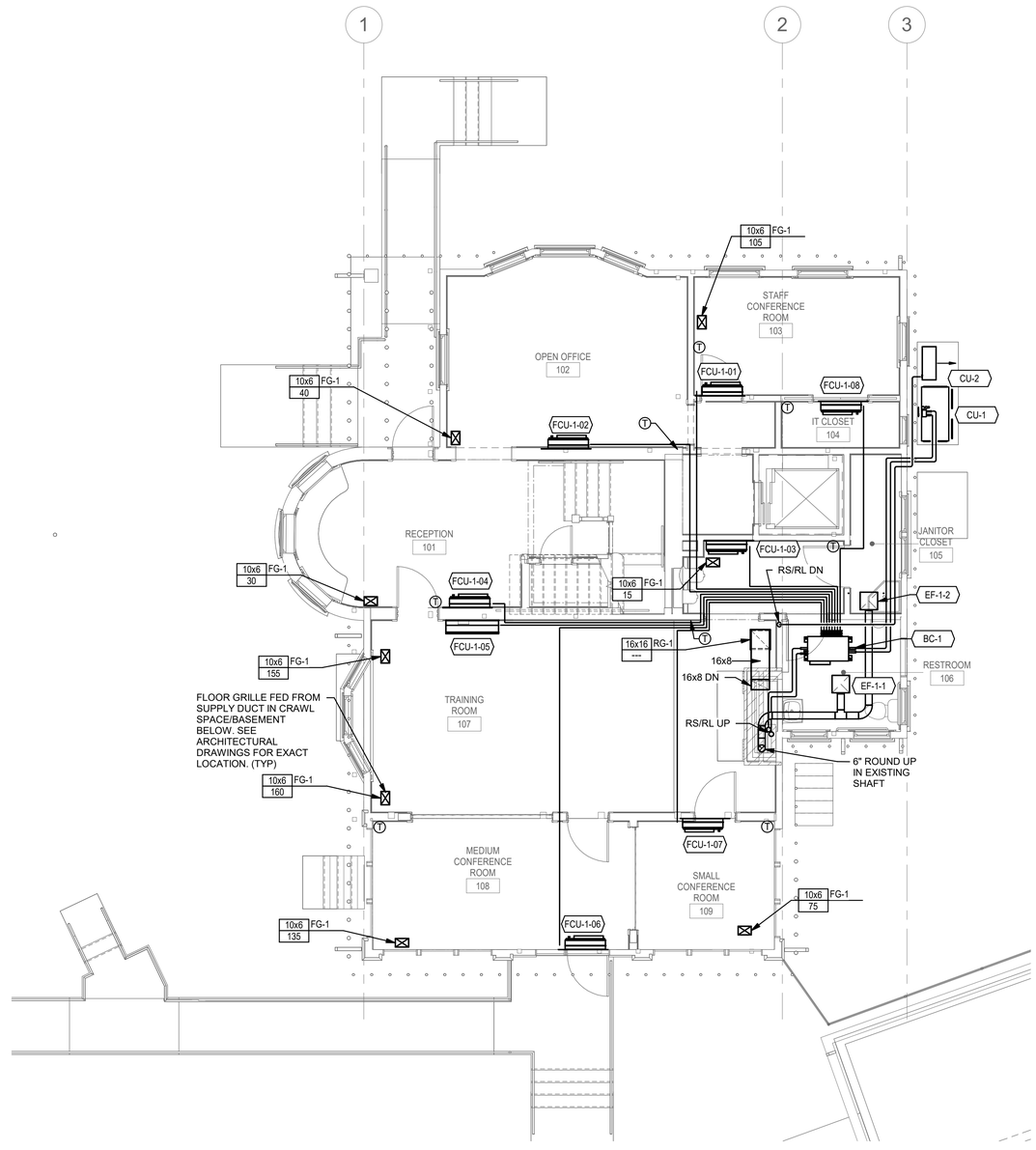

1 LEVEL 1 PLAN - MECHANICAL

0' 4' 8' 12'

3/16" = 1'-0"

CLIENT

GENERAL SERVICES AGENCY GSA COUNTY OF ALAMEDA

ALAMEDA COUNTY

INTERFACE ENGINEERING

PROJECT 2025-1084
CONTACT Hugh Kettler

1999 Harrison Street, Suite 550
Oakland, CA 94612
TEL 415.489.7240
www.interfaceengineering.com

NOTE: If this drawing is not 22"x34" it has been revised from its original size and the scales noted on drawing/details are no longer applicable.

© 2022 Shah Kawasaki Architects

Revision Number	DATE	ISSUE DESCRIPTION
	09/03/2026	PERMIT SET

Project

WHITECOTTON COTTAGE REHABILITATION

15400 FOOTHILL BLVD
SAN LEANDRO, CA 94578

Architect of Record

P&T

Consultant

PAGE & TURNBULL
170 MAIDEN LANE, 5TH FLOOR
SAN FRANCISCO, CA

REGISTERED PROFESSIONAL ENGINEER
HUGH KETTLER
No. M42617
Exp: 06/30/2027
MECHANICAL
STATE OF CALIFORNIA

Drawing Title

LEVEL 1 PLAN - MECHANICAL

Drawing No.

M1.01

SKA Project Number: 25001

SHEET KEYNOTES

1. EXHAUST UP TO ROOF IN EXISTING SHAFT. PROVIDE BIRD SCREEN AND RAIN CAP AT ROOF.
2. OUTSIDE AIR INTAKE LOUVER WITH AT LEAST 0.7 SQ. FT. OF FREE AREA.
3. ERV EXHAUST AND BREAK ROOM EXHAUST CONNECT TO A SINGLE EXHAUST LOUVER WITH AT LEAST 1 SQ. FT. OF FREE AREA.

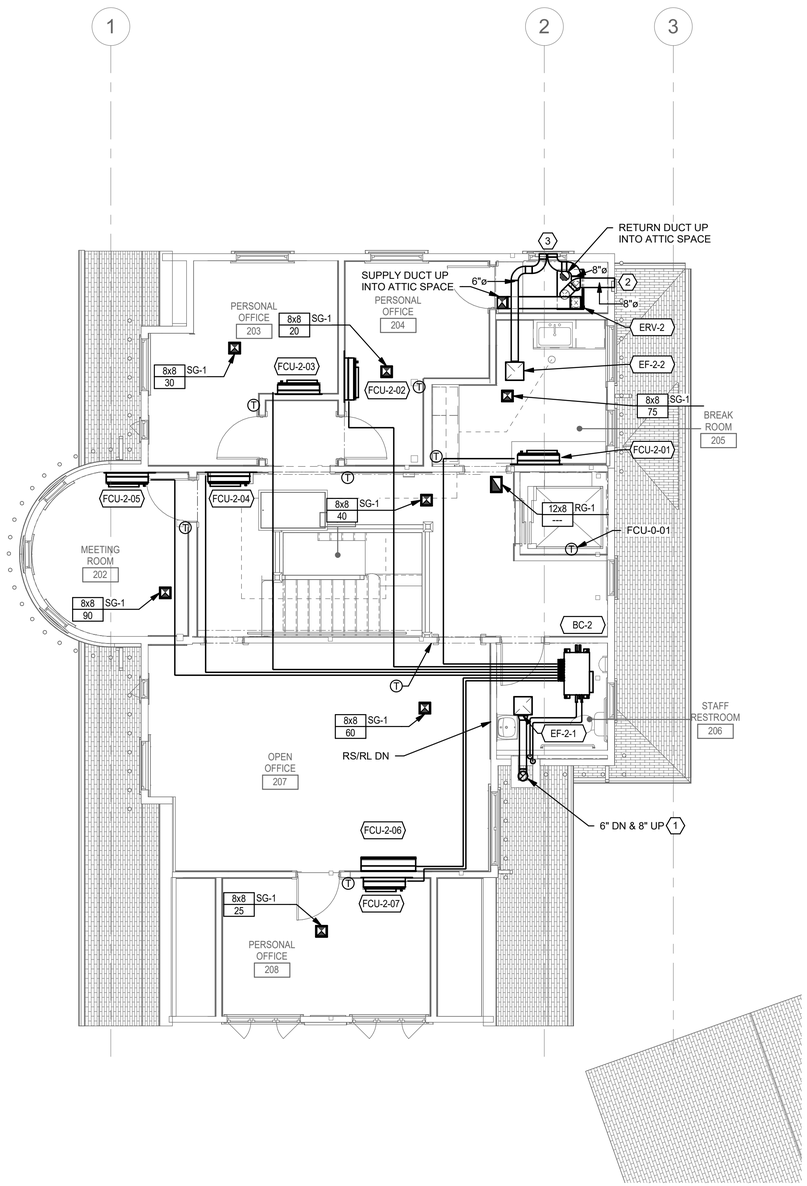

1 LEVEL 2 PLAN - MECHANICAL

0' 4' 8' 12'

3/16" = 1'-0"

CLIENT

GENERAL SERVICES AGENCY GSA COUNTY OF ALAMEDA

ALAMEDA COUNTY

INTERFACE ENGINEERING

PROJECT 2025-1084
CONTACT Hugh Kettler

1999 Harrison Street, Suite 550
Oakland, CA 94612
TEL 415.489.7240
www.interfaceengineering.com

NOTE: If this drawing is not 22"x34" it has been revised from its original size and the scales noted on drawing/details are no longer applicable.

© 2022 Shah Kawasaki Architects

Revision Number	DATE	ISSUE DESCRIPTION
	09/03/2026	PERMIT SET

Project

WHITECOTTON COTTAGE REHABILITATION

15400 FOOTHILL BLVD
SAN LEANDRO, CA 94578

Architect of Record

P&T

Consultant

PAGE & TURNBULL
170 MAIDEN LANE, 5TH FLOOR
SAN FRANCISCO, CA

REGISTERED PROFESSIONAL ENGINEER
HUGH KETTLER
No. M42617
Exp: 06/30/2027
MECHANICAL
STATE OF CALIFORNIA

Drawing Title

LEVEL 2 PLAN - MECHANICAL

Drawing No.

M1.02

SKA Project Number: 25001

Quick Results

Connection Summary

Indoor Units:	14 / 1 to 39	
Capacity:	220 / 96 to 288 (114.6%)	
* Connectable capacity is not actual capacity.		
Total Pipe Length:	660.3/2047	feet
Furthest Actual:	110/541	feet
Furthest Equiv.:	134.7/623	feet
Furthest IU from Parent BC Actual:	45/192.9	feet
Furthest IU from Parent BC Equiv.:	53.2/192.9	feet
Furthest IU from Main BC Thru Sub BC Actual:	70/284.9	feet
Furthest IU from Main BC Thru Sub BC Equiv.:	86.4/284.9	feet

Refrigerant

System Refrigerant:	**R32**
Additional Field-Charge:	**41.89 lbs**
Total System Charge:	**55.78 lbs**
Max System Charge:	**92.81 lbs**

Correction Factors

	Cooling	Heating
Outdoor Unit Capacity:	1.02	1.00
Outdoor Temperature:	1.02	1.00
Piping Length:	0.95	0.95
Defrosting:	-	0.76
User Derate:	1.00	1.00
Outdoor Altitude:	1.00	1.00
	0.99	**0.72**

Conditions

Cooling		Heating	
Indoor Dry Bulb	80.0 °F	Indoor Dry Bulb	70.0 °F
Indoor Wet Bulb	67.0 °F		
Indoor Humidity	51.8 %	Outdoor Dry Bulb	36.9 °F
		Outdoor Wet Bulb	33.8 °F
Outdoor Dry Bulb	90.0 °F	Outdoor Humidity	72.8 %

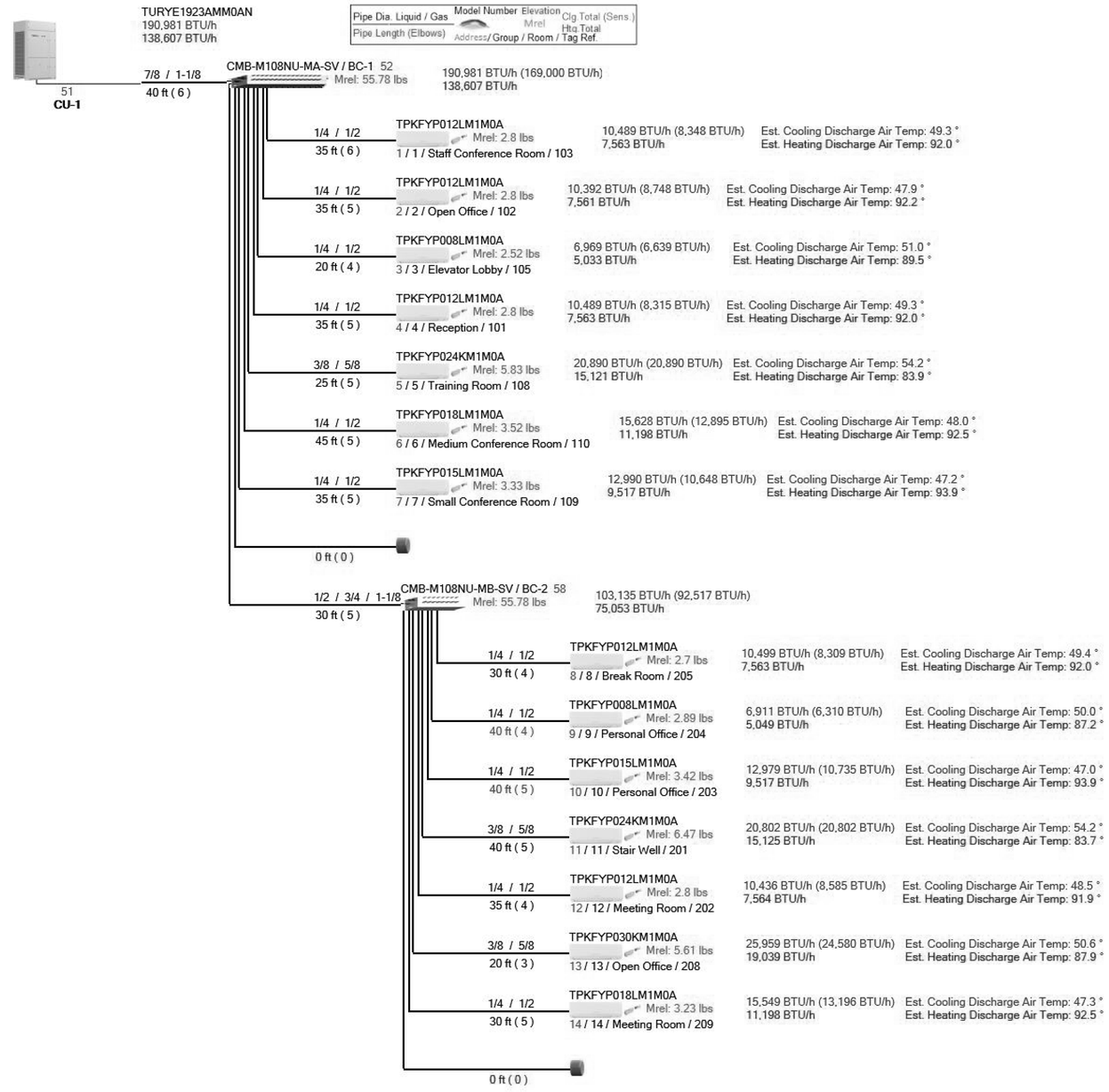

CLIENT

GENERAL SERVICES AGENCY
GSA
COUNTY OF ALAMEDA

ALAMEDA COUNTY

INTERFACE ENGINEERING
PROJECT 2025-1084
CONTACT Hugh Kettler
1999 Harrison Street, Suite 550
Oakland, CA 94612
TEL 415.489.7240
www.interfaceengineering.com

NOTE: If this drawing is not 22"x34" it has been revised from its original size and the scales noted on drawing/details are no longer applicable.
© 2022 Shah Kawasaki Architects

Revision Number	DATE	ISSUE DESCRIPTION
	09/03/2026	PERMIT SET

Project

WHITECOTTON COTTAGE REHABILITATION
15400 FOOTHILL BLVD
SAN LEANDRO, CA 94578

Architect of Record

P&T

Consultant

PAGE & TURNBULL
170 MAIDEN LANE, 5TH FLOOR
SAN FRANCISCO, CA

REGISTERED PROFESSIONAL ENGINEER
HUGH KETTLER
No. M42617
Exp: 06/30/2027
MECHANICAL
STATE OF CALIFORNIA

Drawing Title

DIAGRAMS - MECHANICAL

Drawing No.

M3.01

SKA Project Number: 25001

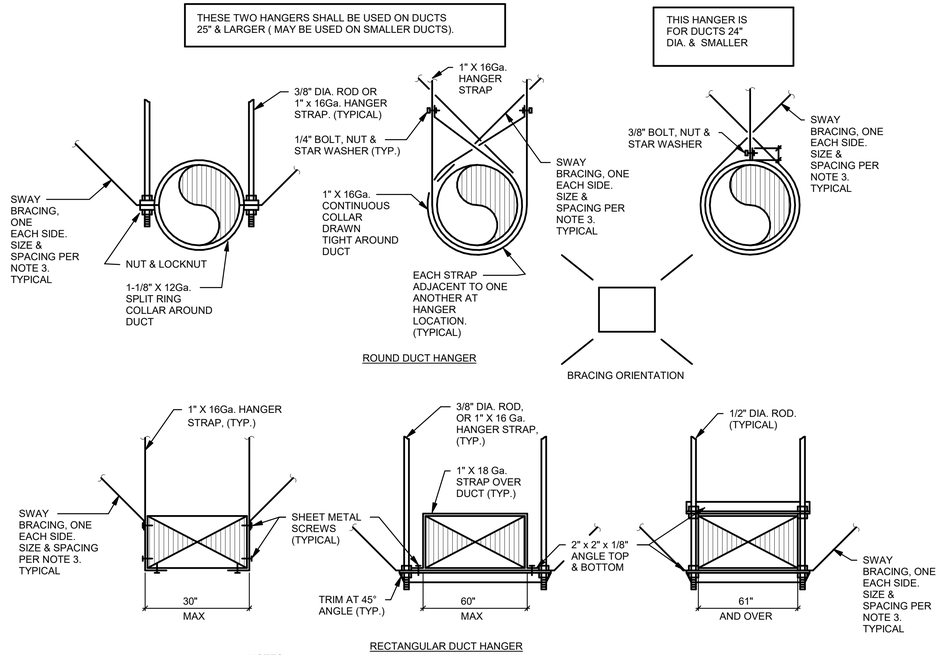

NOTES:

1. REFER TO SPECIFICATIONS FOR HANGER SPACINGS.
2. ATTACHMENTS TO OVERHEAD STRUCTURE SHALL BE MADE IN ACCORDANCE WITH STRUCTURAL ENGINEERS REQUIREMENTS AND WEIGHT LIMITATIONS. ALL ATTACHMENT METHODS TO STRUCTURE SHALL BE SUBMITTED TO ARCHITECT AND STRUCTURAL ENGINEER FOR REVIEW.
3. PROVIDE SWAY & SEISMIC BRACING PER THE LATEST EDITION OF CALIFORNIA BUILDING CODE. INDICATE LOCATIONS OF SEISMIC BRACING ON THE SHOP DRAWING SUBMITTALS.
4. HANGER MATERIAL SUPPORTING FLEXIBLE DUCT SHALL IN NO CASE BE LESS THAN 1 1/2 INCHES WIDE. FLEXIBLE DUCT SHALL BE SUPPORTED PER MANUFACTURER'S RECOMMENDED MATERIALS, BUT AT NO GREATER DISTANCE THAN 4 FEET MAX. PERMISSIBLE SAG IS MAX. 1/2 INCHES PER FOOT OF SPACING BETWEEN SUPPORTS.

3 DUCT SUPPORT DETAIL

NO SCALE

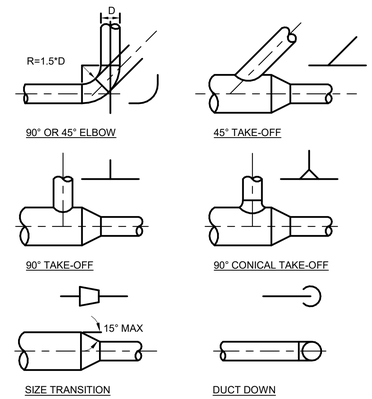

NOTES

1. SINGLE-LINE ILLUSTRATIONS ARE SYMBOLS USED ON DRAWINGS
2. PROVIDE ACCESS PANELS AT EVERY 50'-0" OF STRAIGHT DUCT AND UPSTREAM OF EACH ELBOW

2 ROUND DUCT DETAIL

NO SCALE

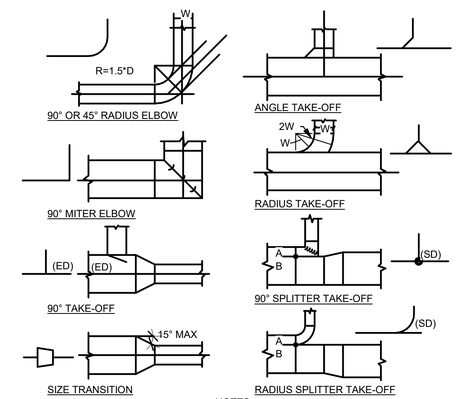

NOTES

1. SINGLE-LINE ILLUSTRATIONS ARE SYMBOLS USED ON DRAWINGS
2. SIZE A&B DIMENSIONS IN PROPORTION TO AIR QUANTITIES IN EACH LEG SPLIT

1 RECTANGULAR DUCT DETAIL

NO SCALE

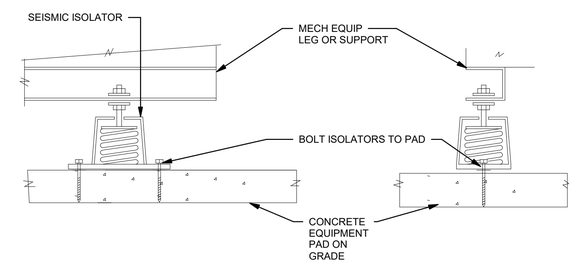

4 EQUIPMENT ISOLATOR DETAIL (CU-x)

NO SCALE

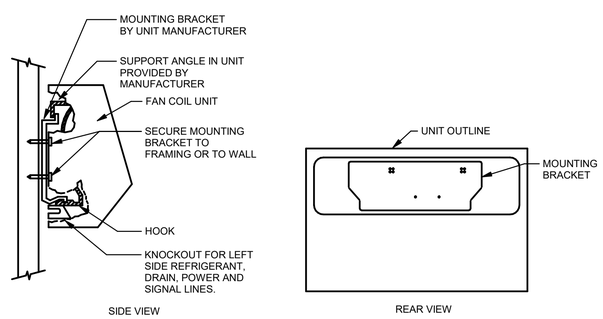

NOTE:
1. FOR DRAIN CONNECTION, REFER TO PLUMBING DRAWINGS.

5 WALL MOUNTED DUCTLESS SPLIT SYSTEM MOUNTING DETAIL

NO SCALE

CLIENT

ALAMEDA COUNTY

INTERFACE ENGINEERING
PROJECT 2025-1084
CONTACT Hugh Kettler
1999 Harrison Street, Suite 550
Oakland, CA 94612
TEL 415.489.7240
www.interfaceengineering.com

NOTE: If this drawing is not 22"x34" it has been revised from its original size and the scales noted on drawing/details are no longer applicable.

© 2022 Shah Kawasaki Architects

Revision Number	DATE	ISSUE DESCRIPTION
	09/03/2026	PERMIT SET

Project

WHITECOTTON COTTAGE REHABILITATION

15400 FOOTHILL BLVD
SAN LEANDRO, CA 94578

Architect of Record

P&T

Consultant

PAGE & TURNBULL
170 MAIDEN LANE, 5TH FLOOR
SAN FRANCISCO, CA

REGISTERED PROFESSIONAL ENGINEER
HUGH KETTLER
No. M42617
Exp: 06/30/2027
MECHANICAL
STATE OF CALIFORNIA

Drawing Title

DETAILS - MECHANICAL

Drawing No.

M4.01

SKA Project Number: 25001

GENERAL DETAIL NOTES

A. CAULK AROUND PIPING PENETRATING FIRE RATED WALLS AND CEILINGS. USE 3M BRAND FIRE BARRIER CAULK "CP25" (THICKNESS AS REQUIRED FOR 1,2 AND/OR 3 HOUR FIRE RATING.).

B. USE CP25S/L SELF-LEVELING CAULK ON HORIZONTAL SURFACES WHEN FILLING GAPS FROM ABOVE THE PENETRATION. USE CP-25N/S NO-SAG CAULK ON VERTICAL AND HORIZONTAL SURFACES WHEN FILLING FROM FLOOR OR IN WALL APPLICATIONS.

C. ALL FIRE STOP INSTALLATIONS SHALL COMPLY WITH U.L., A.S.T.M. AND MANUFACTURERS STANDARD DETAILS.

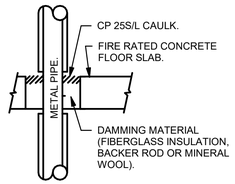

SECTION VIEW

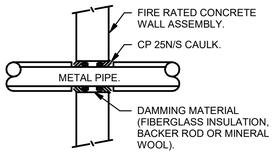

SECTION VIEW

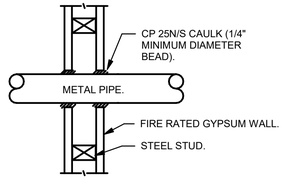

SECTION VIEW

2 RATED WALL, FLOOR AND CEILING PIPING PENETRATION

NO SCALE

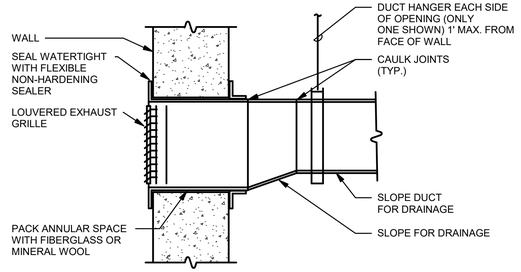

1 LOUVERED EXHAUST GRILLE WALL PENETRATION

NO SCALE

NOTE:
4" PIPE MAXIMUM. CONSULT STRUCTURAL ENGINEER FOR MULTIPLE PIPE AND OTHER CONDITIONS NOT COVERED IN SUPPORT DETAIL.

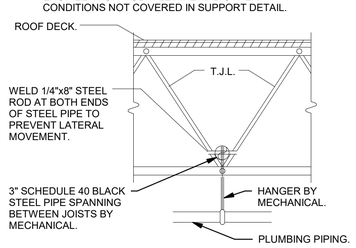

PIPE SUPPORT "A"

NO SCALE

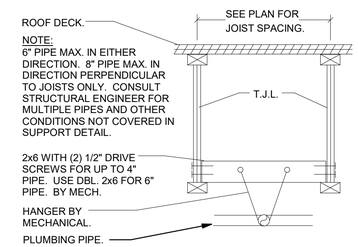

NOTE:
6" PIPE MAX. IN EITHER DIRECTION. 8" PIPE MAX. IN DIRECTION PERPENDICULAR TO JOISTS ONLY. CONSULT STRUCTURAL ENGINEER FOR MULTIPLE PIPES AND OTHER CONDITIONS NOT COVERED IN SUPPORT DETAIL.

PIPE SUPPORT "B"

NO SCALE

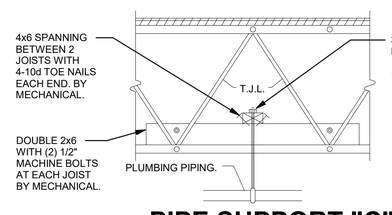

NOTE:
6" PIPE MAX. IN EITHER DIRECTION. 8" PIPE MAX. IN DIRECTION PERPENDICULAR TO JOISTS ONLY. CONSULT STRUCTURAL ENGINEER FOR MULTIPLE PIPES AND OTHER CONDITIONS NOT COVERED IN SUPPORT DETAIL.

PIPE SUPPORT "C"

NO SCALE

3 PIPE SUPPORT

NO SCALE

CLIENT

GENERAL SERVICES AGENCY GSA COUNTY OF ALAMEDA

ALAMEDA COUNTY

INTERFACE ENGINEERING

PROJECT 2025-1084
CONTACT Hugh Kettler

1999 Harrison Street, Suite 550
Oakland, CA 94612
TEL 415.489.7240
www.interfaceengineering.com

NOTE: If this drawing is not 22"x34" it has been revised from its original size and the scales noted on drawing/details are no longer applicable.

© 2022 Shah Kawasaki Architects

Revision Number	DATE	ISSUE DESCRIPTION
	09/03/2026	PERMIT SET

Project

WHITECOTTON COTTAGE REHABILITATION

15400 FOOTHILL BLVD
SAN LEANDRO, CA 94578

Architect of Record

P&T

Consultant

PAGE & TURNBULL
170 MAIDEN LANE, 5TH FLOOR
SAN FRANCISCO, CA

REGISTERED PROFESSIONAL ENGINEER
HUGH KETTLER
No. M42617
Exp: 06/30/2027
MECHANICAL
STATE OF CALIFORNIA

Drawing Title

DETAILS - MECHANICAL

Drawing No.

M4.02

SKA Project Number: 25001